VÖLKEL
MIKROELEKTRONIK

Völkel standard controls

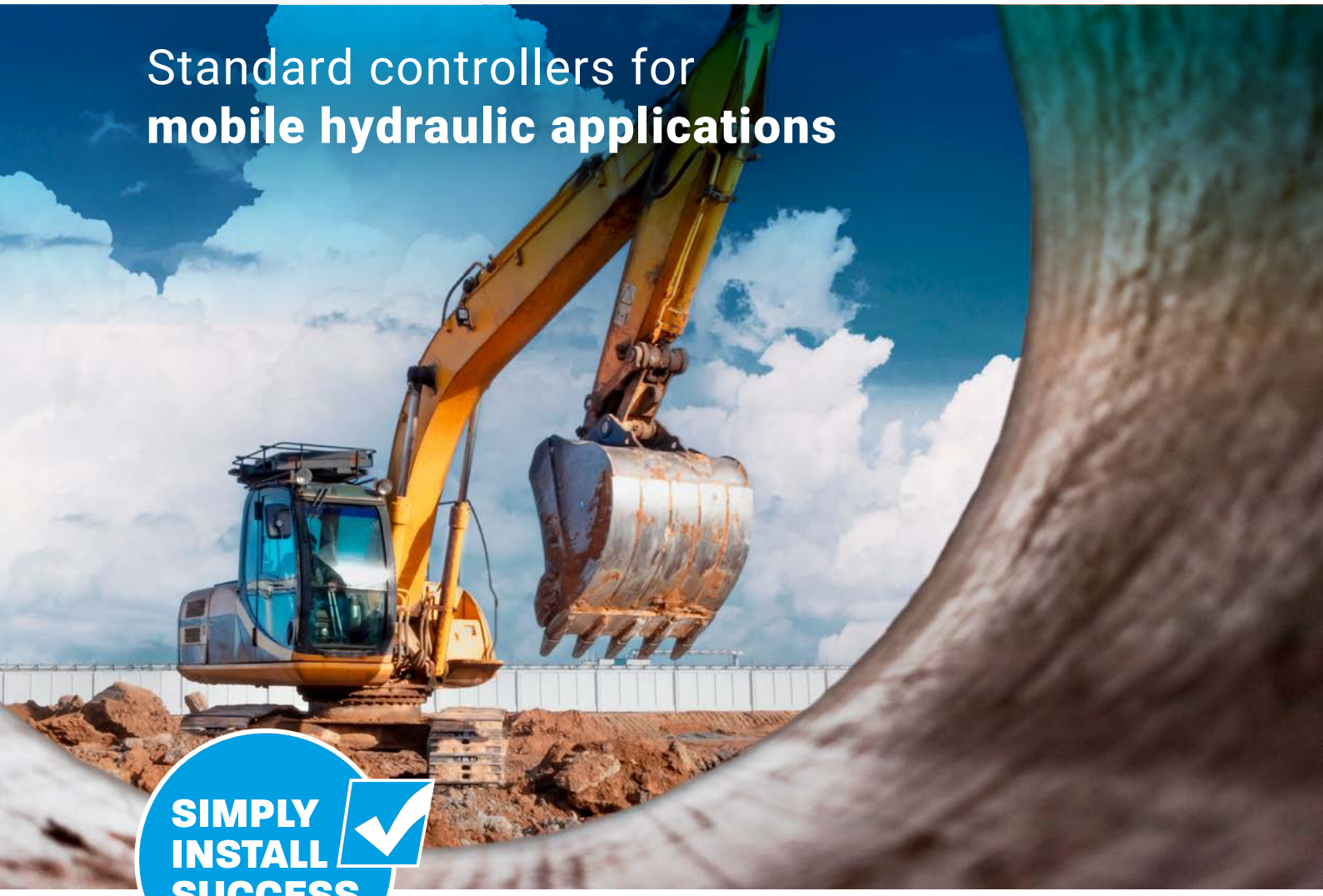

Standard controllers for **mobile hydraulic applications**

SIMPLY
INSTALL
SUCCESS

www.voelkel.de

Völkel Steuerungstechnik – Control in perfection

Standard controllers for mobile hydraulic applications

Table of contents

Standard controllers from Völkel 3

Proportional booster VCB (Valve Control Basic) 4

Volume, pressure and power controller VPP (Volume-, Pressure-, Power-Control) 6

Pressure limiter DPL (Digital Pressure Limiter) 8

Position controller PCB (Position Control Basic) 10

Speed controller MSC (Motor Speed Control) 11

Cylinder synchronization control CSC (Cylinder Synchronous Control) 12

Speed controller with diesel speed compensation MEC (Motor Speed Control with Engine Compensation) 14

Limit load control DAS (Dynamic Anti-Stall Control) 16

Basic drive control DCB (Drive Control Basic) 18

Advanced drive control DCE (Drive Control Eco) 20

Drive control traction (Drive Control with traction control) 22

Basic crawler control CCB (Crawler Control Basic) 24

Professional crawler control CCP (Crawler Control Professional) 26

Overview of drive and crawler controls 29

Steering control SCB (Steering Control Basic) 30

Control units HCB und HCE 32

PC-software ConDoc® 34

Standard controllers from Völkel

First class from experience

Völkel Mikroelektronik has been developing and producing digital, electronic controllers for mobile machines for more than 40 years. We are specialists for the control of mobile hydraulic processes..

Modular design

The better a machine fulfills its special task, the more attractive it is for the market. Our specialty is to take a holistic view of the machine and to develop the perfect solution for each individual customer. In order for complex machines to be ready for the market in an acceptable development time, we work with a high degree of modularization in the controller systems. The modules are often standard solutions that have already proven themselves many times in the market.

Flexible adaptation

Völkel control systems are adapted to the machine by means of parameterization without the need for programming knowledge. The settings are made online using the ConDoc® PC software. The parameterization ranges from setting the inputs and outputs on the periphery used to completely changing the control characteristics. The controller receives its function through parameterization.

Robust hardware

The hardware is designed with protection class IP 69K and the extended temperature range (- 40 °C ... + 85 °C) to withstand the extreme operating conditions of mobile work machines. Other features are:

- Reverse polarity protection
- Short circuit robustness
- Power supply 8 - 32V
- Connection via standardized interfaces

Quality from a single source

Quality increases when all processes are subject to the control and influence of a QM system. Hardware and software development mutually strengthen each other. This results in a coherent product, from development to support.

For further information, please contact

Detailed, further information is available for each product. If your special product is not included, we develop individual controllers based on modular hardware and software. Talk to us - we will be happy to create a customized solution for you for small or large quantities: we can adapt a controller feature or we can provide you with a tailored solution.

Basic structure of a standard controller

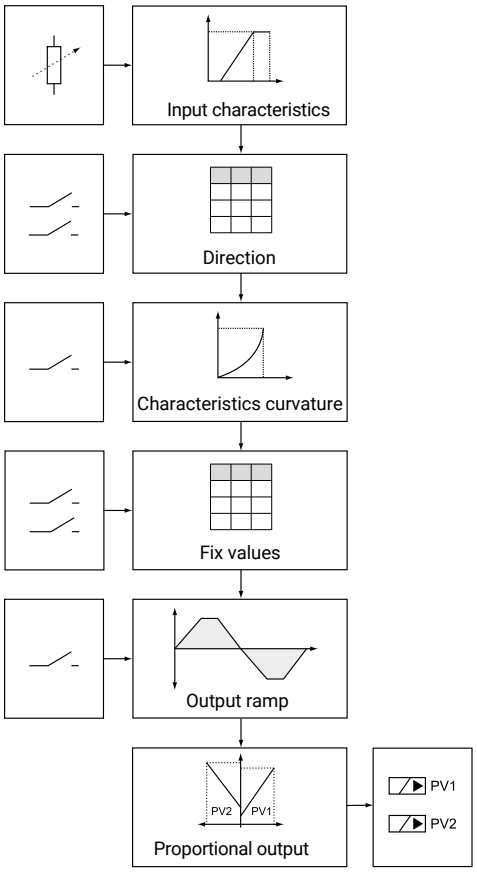

Proportional booster VCB
(Valve Control Basic)

The proportional booster controls the volume and thus the speed of an actuator. The set values are read in by set value generators, higher-level controls or sensors and mapped to proportional currents for controlling the solenoids of valves.

The standard hardware for this controller is the HCB controller, which can be used to control up to 4 magnets. VCB enables the configuration of 4 unidirectional valves (e. g. variable throttles, hydraulic motors, etc.), 2 unidirectional and one bidirectional valve (e. g. pump, 4/3-way valve, etc.) as well as 2 bidirectional valves. For setting set values, analog inputs for encoders as well as digital inputs for fixed values are available, both of which can be called up via switches.

The benefit of electro-proportional adjustment is the responsive control of actuators. Their non-linearity can be compensated for by applying characteristic curves; joysticks or accelerator pedals are also overlaid with characteristic curves in order to increase the sensitivity of the control system. Target values are reached via configurable ramps, there are different ramps for different target values.

If more than 4 solenoids are to be actuated, the controller Valve Control Basic can be ported to other hardware platforms. A customer-specific extension would be, for example, the multiple assignment of a joystick, in which other outputs are assigned to the joystick by means of a switch.

The control function is defined by means of parameterization.

Possible applications are e. g. excavator booms, discharge belts, etc.

Inputs and outputs

- Digital inputs, parameterizable as enabled, direction selection, fixed values, parameter set selection or characteristic switching
- Analog inputs (0 - 10 V/0 - 20 mA) for Set value input, with parameterizable cable break detectiong
- Proportional outputs with current feedback measurement for proportional valves
- Digital outputs for status display and fault diagnosis

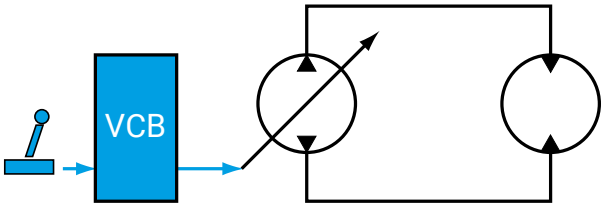

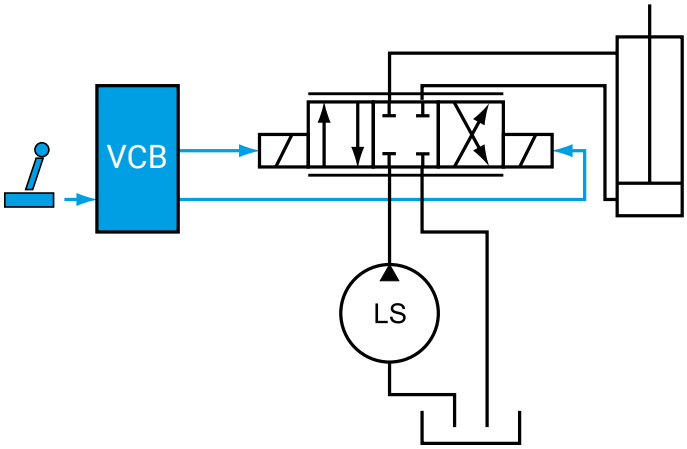

Proportional booster VCB
[Connection example]

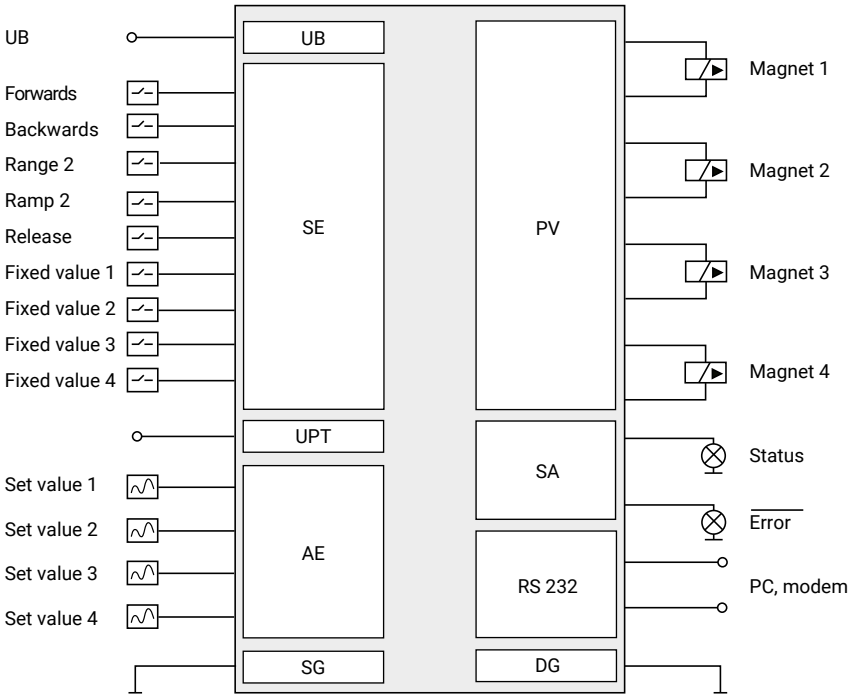

Proportional booster

HCB-VCB (Valve Control Basic)
2 axles, 4 solenoids, universal software

Volume, pressure and power control VPP (volume, pressure, power control)

According to the parameterization, the volume, pressure and power controller regulates the volume, pressure or power of the hydraulics to the set value. The control characteristic can be freely parameterized. Depending on the application, it is also possible to switch between different control characteristics or dynamically adjust the controller gain depending on the magnitude and sign of the regulation deviation. To prevent the hydraulic system from reacting too quickly, steps in the set value can be limited by freely adjustable ramps.
If the controller is set as a power regulator, the power reserve of the drive can be calculated from the drive torque and speed and taken into account. For this purpose, the torque characteristic curve of a diesel engine is parameterized in tabular form and the speed is measured. Alternatively, for electric motors, it is possible to parameterize the drive power via fixed values for torque and speed.

The standard hardware platform for the VPP is the HCB controller. The VPP supports the operation of a tandem pump. If it is integrated into a machine controller, it can easily be ported to another Völkel hardware platform.
The volume, pressure and power controller is used, for example, in bow thrusters, in the power control of spray pumps and screw conveyors.

Inputs and outputs

- Digital inputs for volume, pressure and power controller enabling, forward/reverse, controller switching, fixed values
- Frequency input for diesel speed acquisition (pickup or terminal W)
- Analog inputs: set values for volume, pressure and power, and to capture the actual pressure value per direction
- Proportional outputs for controlling a (Tandem) pump
- Status outputs, parameterizable for display of limitations and faults

Actual speed
Actual pressure forwards
Actual pressure backwards
Target value

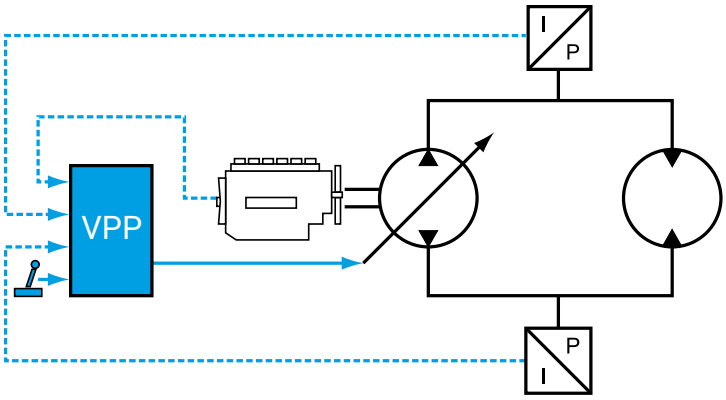

Volume, pressure and power control VPP
(Connection example)

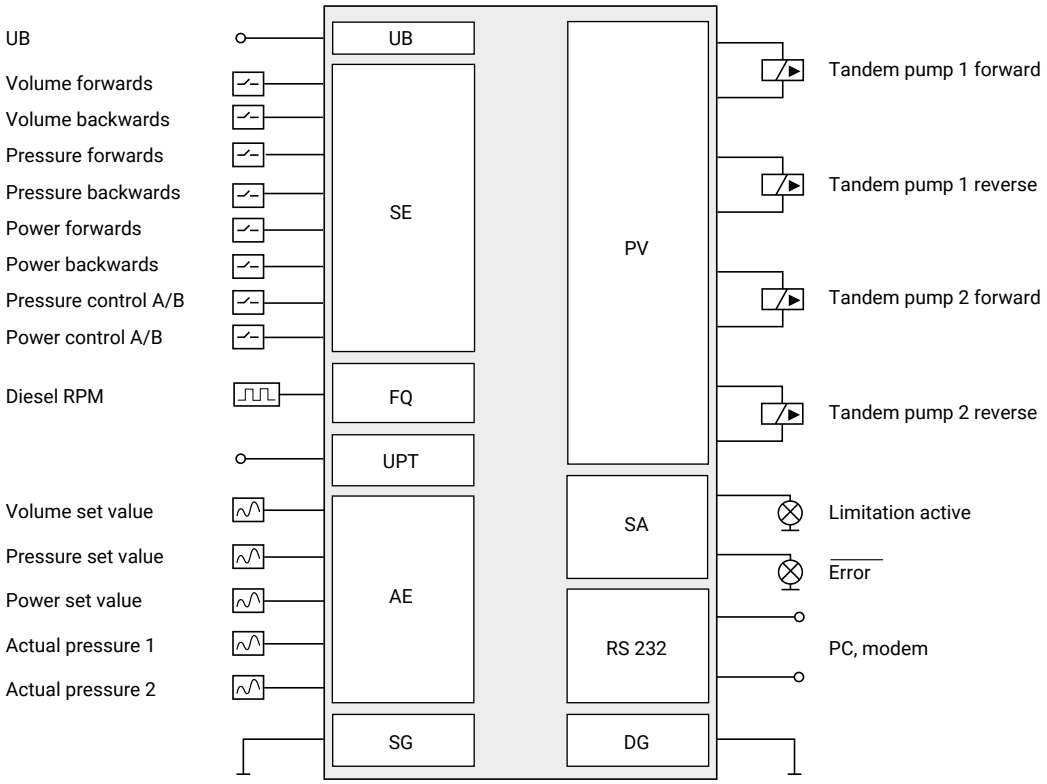

Volume, pressure and power

HCB-VPP (Volume-, Pressure-, Power-control)
Control of 1 axle with 2 magnets or one tandem pump

Pressure Limiter DPL
(Digital Pressure Limiter)

In normal operation, the pressure limit is set analog. Below the pressure limit, the pressure limiter operates as a normal proportional booster for hydraulic axles Accordingly, the specified set values are read in by set value generators or superordinate controllers or sensors, and converted to proportional currents for controlling the solenoids of pumps. When pressure limitation is activated, the volume and thus the pressure are regulated according to the set pressure value and calculated pressure set value, when the actual pressure value exceeds the pressure set value. The DPL can also be operated as a pressure regulator. In this operating mode, a limiting value for the volume is set and the pressure set value is varied analog. Below the limiting volume, the DPL then works as a pressure regulator.

The standard hardware platform for the pressure limiter is the HCB controller. 2 pumps can be controlled bidirectionally. If the DPL is to be integrated into a machine controller, it can easily be ported to another Völkel hardware platform. A special feature of the pressure regulator mode of operation is that only the high pressure A is measured. A control strategy has been implemented which allows a pump to be controlled through zero in the opposite direction when back pressure generated by the hydraulic motor. The controller is therefore particularly suitable for winches in shipping, where the rope must always be kept in tension even in swell or currents (mooring system).

An additional frequency input for each axle makes it possible to detect and compensate speed fluctuations of the drive unit in order to keep the desired volume flow constant. The pump swivel angle can be captured and controlled when the pump is to be driven very precisely through zero, even when the volume flow is to be controlled very precisely or very precisely and quickly, and even with small set value changes.

In normal operation, the DPL is used, among other things, in drilling rigs where, for example, the pressure on the drill bit is to be limited. It is used as a pressure regulator in anchor winches, for mooring control, etc.

Inputs and outputs

- Digital inputs can be parameterizable as required by the application to enable various functions, ramp selection, set parameter switching, fixed values for volume, fixed values for pressure, reversal of direction, etc.
- Frequency inputs for the detection of the actual diesel engine rotary speed per axle
- Analog inputs for the analog volume and pressure set value and the actual pressure value per axle
- Proportional outputs with current feedback measurement for 2 pumps forward/reverse
- „Limitation active" output status

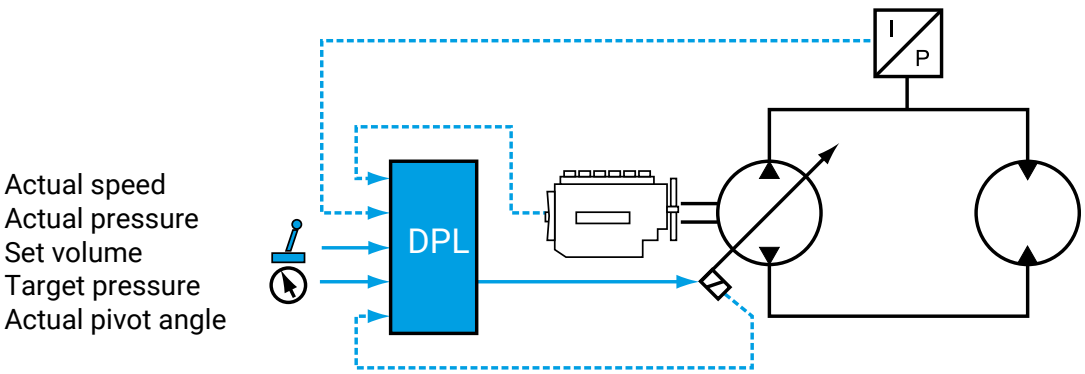

Pressure limiter DPL
(connection example)

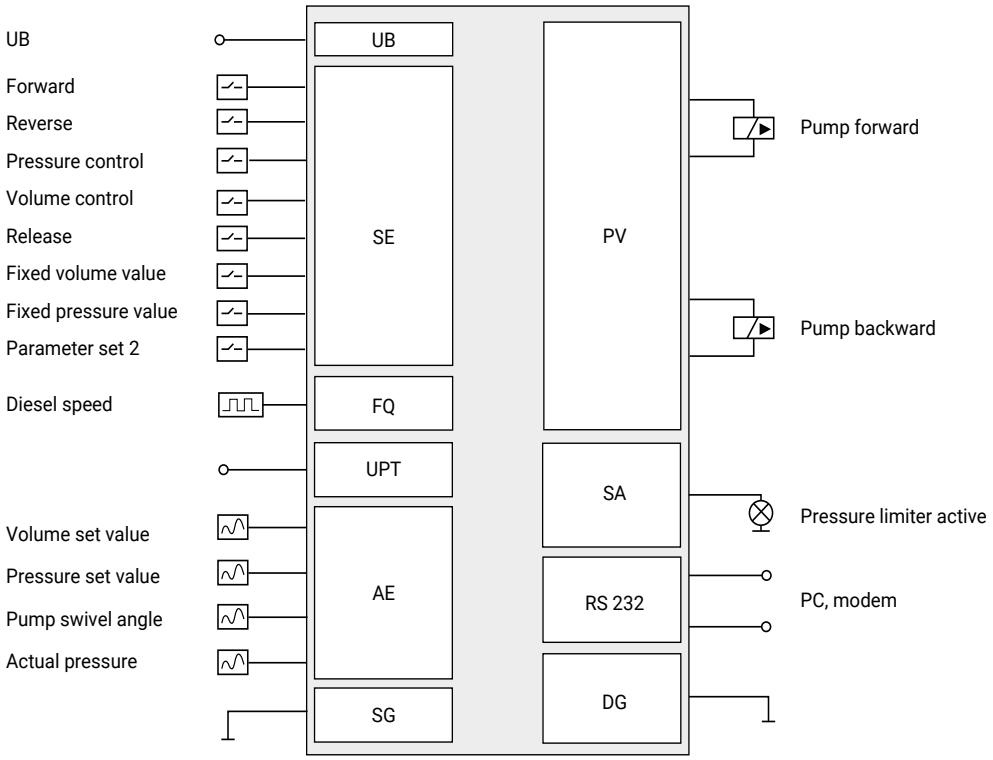

Pressure limiter

HCB-DPL (Digital Pressure Limiter)
2 axles with 2 solenoids pressure limitation and pressure regulator

Position controller PCB
(Position Control Basic)

The position controller for one cylinder is suitable for simple positioning tasks in the hydraulics. It accelerates a hydraulic cylinder in the direction of a target position and keeps it within an adjustable target window after reaching it.

The standard hardware for this controller is the HCA controller, which can be used to control 2 solenoids. The PCB controller thus enables the positioning of a cylinder by means of a 4/3-way valve. The operating modes "Analog" and "Digital" are available, through which an analog variable set value is set and an adjustable digital fixed values is controlled. The control function is defined by means of parameterization.

If it is necessary to integrate the position controller into a machine control system, the porting to another Völkel hardware platform is easily possible. For example, several position controllers can level a vehicle support or interact with other control components.

Possible applications are e.g. height control of a field sprayer, return of a wheel loader shovel to its starting position (return to dig), etc

Inputs and outputs

- Digital inputs, parameterizable for release, for manual lifting and lowering or with up to 4 fixed values
- Analog inputs for set value position and actual position value (4-20mA or 0-10V)
- Proportional outputs with current feedback measurement (cylinder extension and retraction)
- Status output for error messages or "In position"

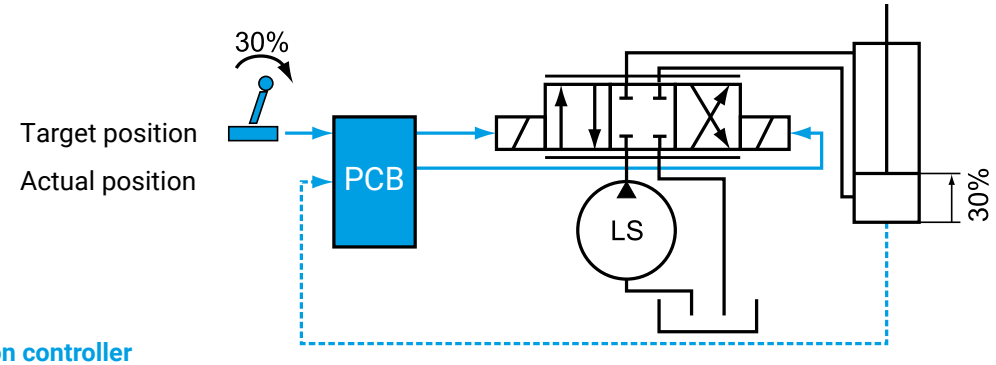

Position controller
[connection example)

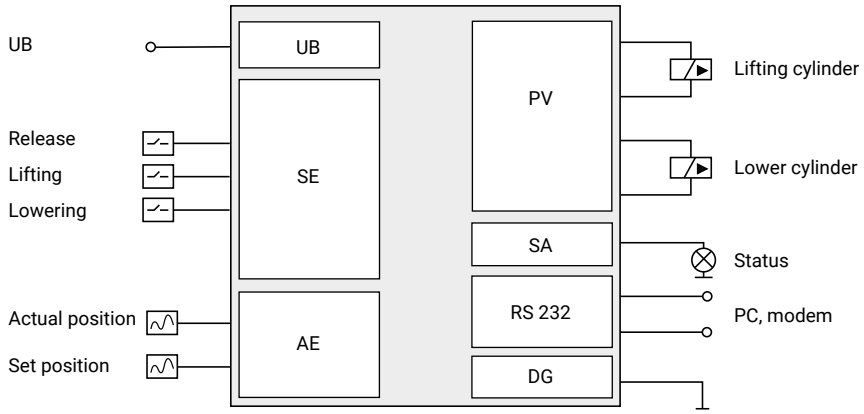

Position controller

HCB-PCB (Position Control Basic)
1 axle with 2 magnets for cylinder positioning

Speed controller MSC
(Motor Speed Control)

The speed controller controls or regulates the speed of a hydraulic motor depending on the parameters set. An analog value (from a higher-level controller) or a frequency signal (speed) can serve as the set value source. A trim factor can be infinitely adjusted between set value for speed and actual speed.

The standard hardware for this control is the HCA controller, which can be used to control 2 solenoids. The MSC control enables the unidirectional control of a pump.

If it is required that the speed controller interacts with another function, it is easily possible to port the function to another hardware platform. An example is the synchronization of a winch with a traction drive for off-road vehicles or with a cylinder function (davit in shipbuilding).

The speed controller is used for speed-dependent spreading of materials (e.g. forage, fertilizer and winter road services), for the synchronization of conveyor belt drives, etc.

Inputs and outputs

- Digital input for enabling, changeover Manual operation
- Frequency inputs for the target and actual speed of the hydraulic motor
- Analog input for the trimming factor or the set value setting in manual mode
- Proportional output with current feedback measurement for a proportional valve
- Status outputs for fault diagnosis

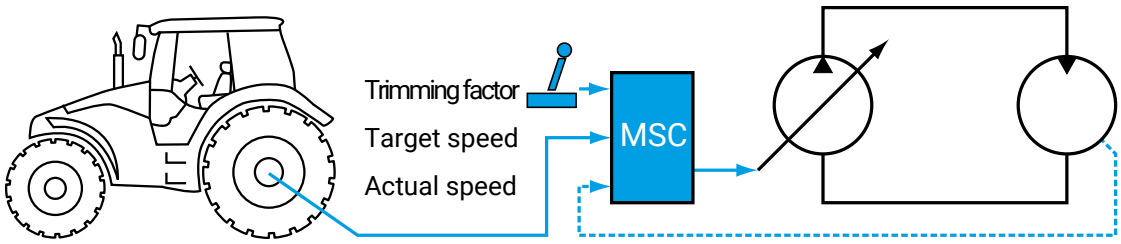

Speed controller MSC
[connection example]

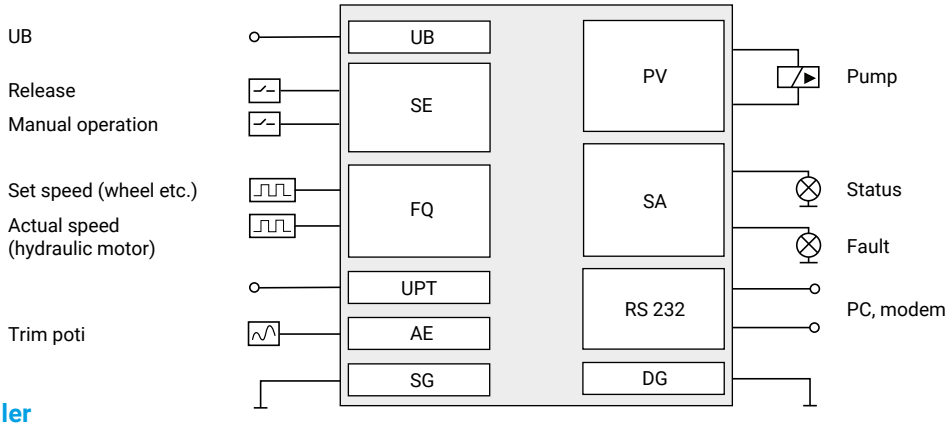

Speed controller

HCB-MSC (Motor Speed Control)
1 axle with 1 solenoid for speed control. Set value setting per analog or frequency input

Cylinder synchronous control CSC
(Cylinder Synchronous Control)

The cylinder position and synchronization controller controls up to 20 cylinders with speed synchronism to reach position. Like the position controller PCB, the controller accelerates the cylinders in the direction of a target position and keeps them within an adjustable target window after reaching it. The standard hardware for this controller is the HCB controller, which can be used to control 4 solenoids (two 4/3-way valves). If the CSC controller is to synchronize more than 2 cylinders then several controllers are networked via CAN bus. The operating modes “Analog” and “Digital” are available, through which an analog variable set value is set and an adjustable digital fixed values is controlled. The positions are approached via adjustable ramps. The maximum speed at which the machine moves into position can be set using an analog value.

Another method to synchronize the position of more than 2 cylinders per controller is to port the function to another hardware platform. The same applies to the interaction of the CSC software with other Völkel standard controllers or the integration of the functionality into a Völkel machine controller.

The synchronization control replaces a hydraulic flow divider. It is easily possible synchronize cylinders, which have a large spatial distance to each other. In contrast to a fixed hydraulic installation, it is possible to move cylinders with different offsets towards each other. The advantage over purely hydraulic control is the variability of the control.

The synchronization controller is used as part of an electronic track rod (special control with steering angledependent offset), for lifting platforms, in material feeds with cascaded sliders, etc..

Inputs and outputs

- Digital inputs for mode changeover, for fixed values, manual operation. Can be parameterized as enabled for position control with fixed position difference between cylinder 1 and 2, allowing fine adjustment of the target position, etc.
- Analog inputs for the set values for position and velocity in manual operation, fine adjustment of the target position, actual position of cylinders 1 and 2
- Proportional outputs with current feedback measurement for 2 cylinders
- Status outputs, for the display of input/output faults, position errors, in position, limitation On/Off active
- CAN interface for communication between the axles

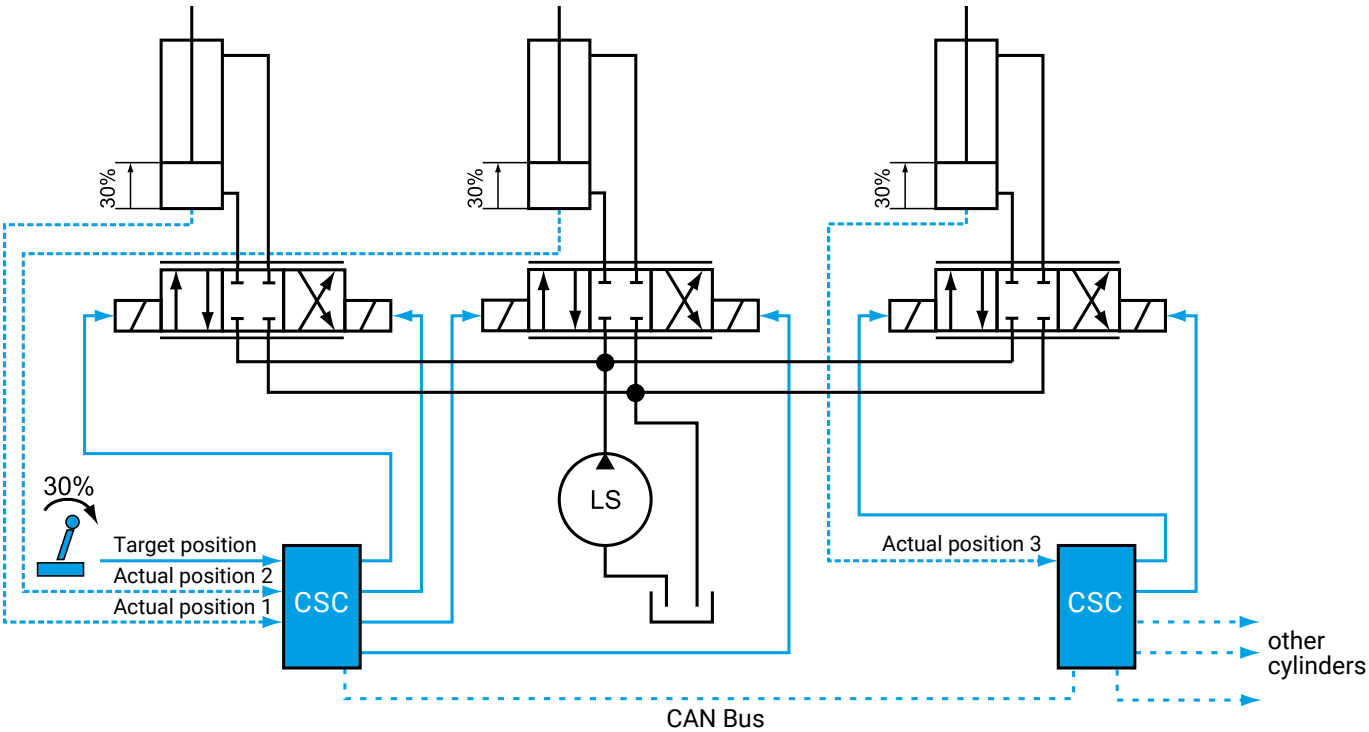

Cylinder synchronous control CSC
[connection example]

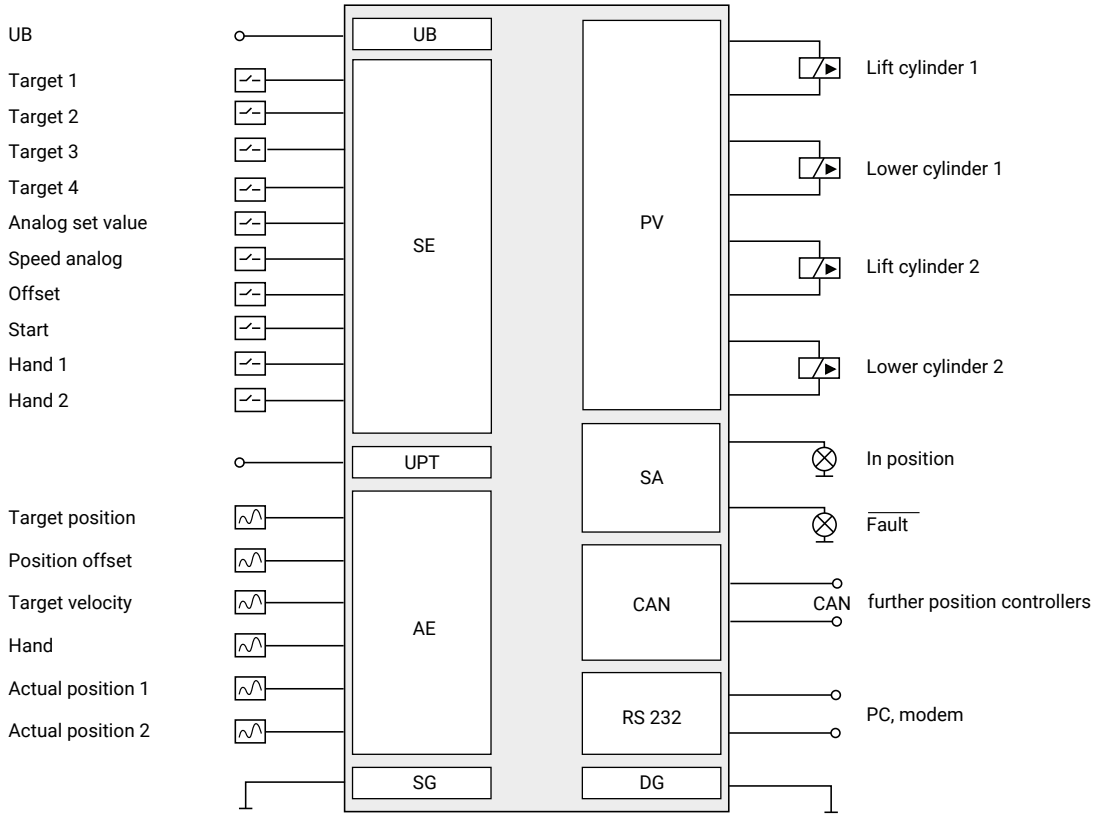

Cylinder synchronous control

HCB-CSC (Cylinder Synchronous Control)
2 axles with 2 solenoids per controller. Synchronization of up to 20 cylinders

Speed controller with diesel engine speed compensation MEC
(Motor speed control with diesel Engine speed Compensation)

The speed controller with diesel engine speed compensation is a further development of the simple speed controller and was developed for a highly constant hydraulic motor speed with a strongly fluctuating drive motor speed. The correction of the diesel speed disturbance variable takes effect upstream of the speed controller so that the speed controller is unburdened. The Hydraulic motor speed set value is set either analog (e.g. by means of a set value generator or a higher-level control system) or digitally as a fixed value.

The standard hardware for this controller is the HCB controller. It controls a pump unidirectionally. The diesel motor can be connected via CAN bus (SAE J1939), terminal W or magnetic pickup. If it is connected via CAN bus, faults in the diesel engine can also be displayed via a switch output. If the MEC is to be integrated into a machine controller, it can easily be ported to another Völkel hardware platform.

The MEC is used in machines where a highly constant control of the hydraulic motor speed is required. These re, for example, vacuum turbines in sweeping machines. A luctuating turbine speed would result in a sawing noise that would not be accepted in cities. In addition, the turbine efficiency is best at the rated speed. Another application is truck-based power generators (fire brigade, rescue services, etc.), where a fluctuating generator speed would result in a fluctuating frequency.

Inputs and outputs

- Switching inputs to enable parameter set switching and for fixed values
- Frequency inputs for the actual diesel speed and hydraulic motor
- Analog input of the set value for the hydraulic motor
- Proportional output with current feedback measurement for the hydraulic pump
- Status outputs for fault management
- Voltage output for display of the hydraulic motor speed
- Frequency output for display of the hydraulic motor speed
- CAN interface for alternative speed measurement of the diesel engine via SAE J1939

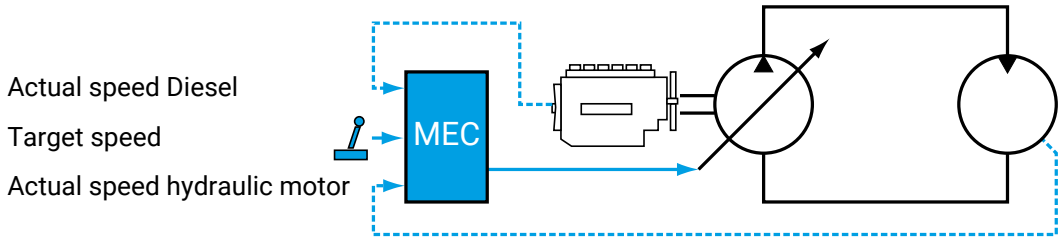

Speed controller with diesel engine speed compensation MEC

[Connection example]

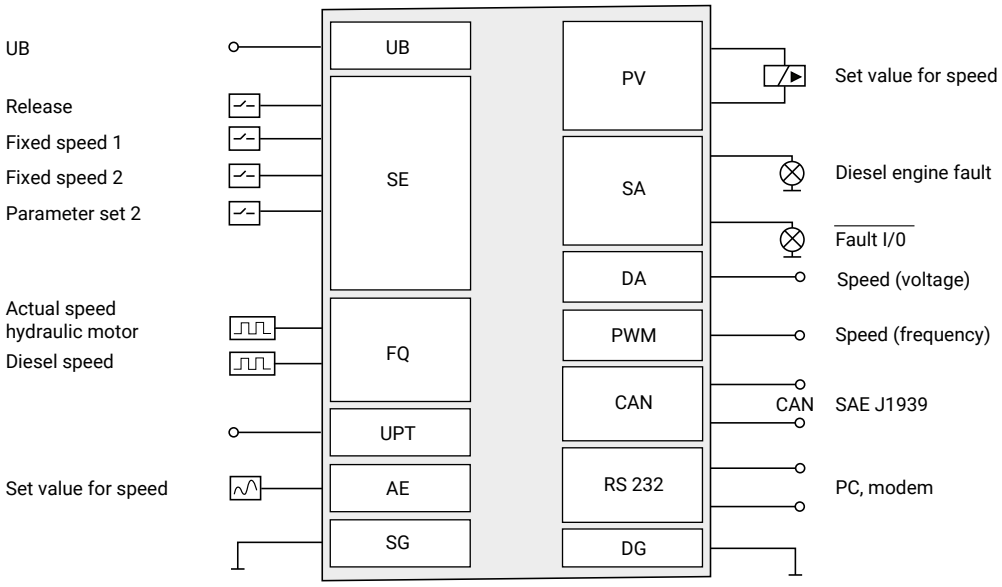

Speed controller with diesel engine speed compensation

HCB-MEC (Motor speed control with diesel Engine speed Compensation)
1 axle with 1 solenoid for unidirectional speed control
with one pump, diesel engine speed compensation

Limit load control DAS
(Dynamic Anti-Stall control)

The limit load control is a flexible solution for protecting the diesel engine against overload. The entire controller behavior can be adapted to the machine.

By means of limit load control, a machine can be developed leaner and used more effectively. Limit load controllers in excavators also contribute efficiently to vibration suppression of the drive train.

The standard hardware platform for the DAS is the HCB controller. The speed of the diesel engine is variably set via the control via CAN bus (SAE J1939 protocol). The controller reads in the actual speed of the diesel engine via CAN bus, terminal W or magnetic pick-up, evaluates the pressure and limits the hydraulic pump directly via the proportional output according to its load.

This load limit control has been specially developed for excavator applications where a very high dynamic control response is required. Limit load controllers in general are an integral part of many Völkel control systems: They are, for example, not only a component of every drive control system but also of many machine control systems, some of which prioritize the power consumption per actuator and work situation. Compared to such integrated limit load controllers, the DAS is highly dynamic.

Inputs and outputs

- Digital inputs for switching between working, automotive and economy mode, for reducing idling speed, for temperature switches and for enabling learning functions
- CAN interface SAE J1939 Frequency inputs dedicated to terminal W and a magnetic pickup
- Analog inputs for set value setting
- Proportional outputs with current feedback measurement for the control of 2 pumps
- Alarm output
- PWM and analog output set speed

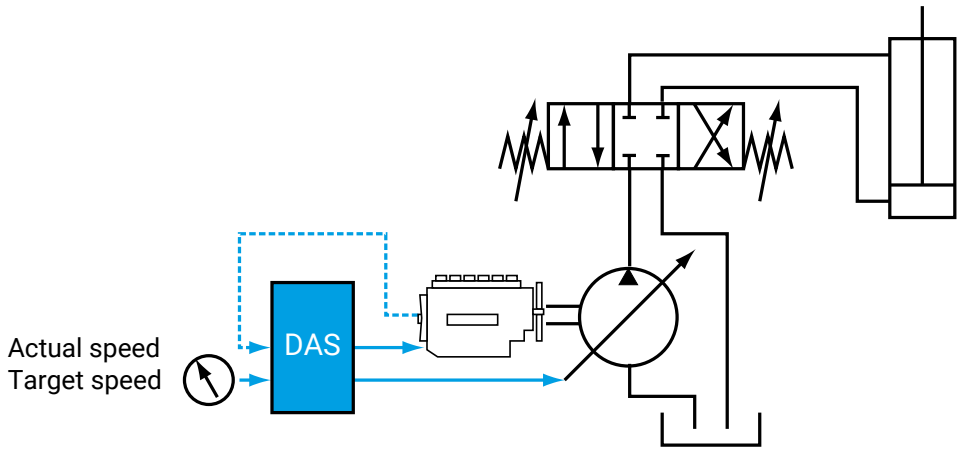

Limit load control DAS
(Connection example]

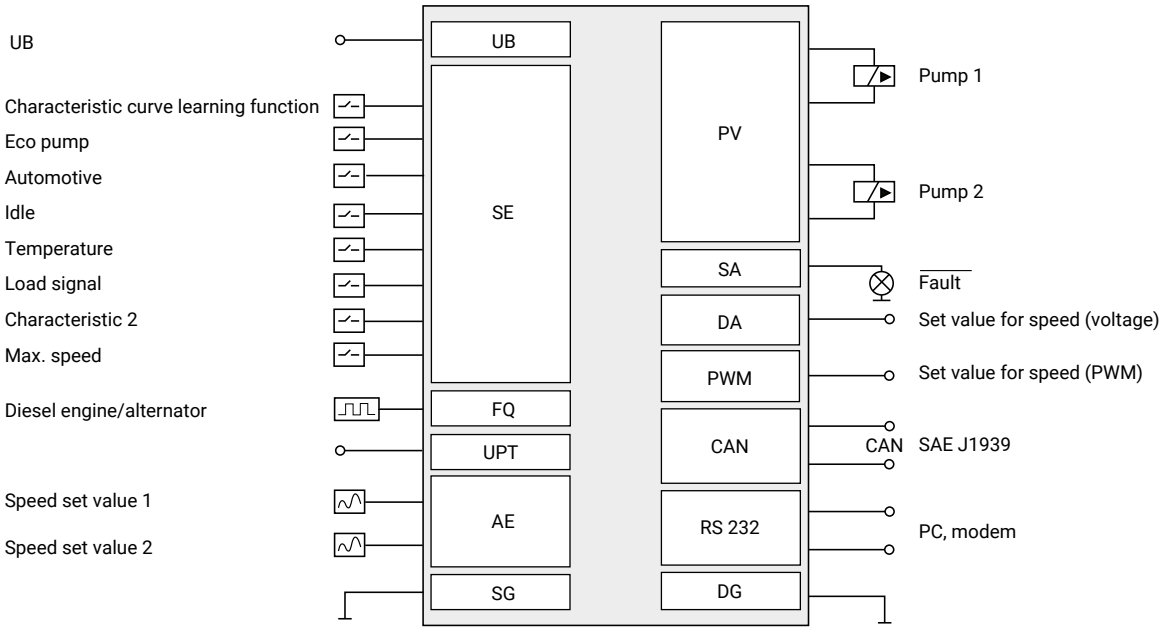

Limit load control

HCB-DAS (Dynamic Anti-Stall control)
Limit load control for diesel engines of all kinds

Basic drive control DCB
(Drive Control Basic)

Electrohydraulic drive controls on mobile machines enable more flexible, sensitive driving behaviour than purely hydraulic solutions. Völkel's basic drive control system enables control of the diesel engine, the drive pump and a hydraulic motor, and already comes equipped with a wide range of functions. At the same time, the control system is designed to be economical even for smaller machines such as wheel loaders.

Depending on the operating mode, various characteristics such as start-up behaviour, acceleration, deceleration and limit values such as the final speed or the speed range of the diesel engine can be adjusted. The range of functions is rounded off by the reverse mode for rapid reversal of direction, speed control, an adjustable creep speed, the inch function and a limit load controller to protect the diesel engine against overload.

The standard hardware platform for the DCB is the HCB controller. If the DCB is to be integrated into a machine control system, it can easily be ported to another Völkel hardware platform.

The functions in detail

Approval and target value specifications

A prescribed procedure must be followed to set the machine in motion: First, the diesel engine must be started, then the drive release is granted, and only then can a setpoint for the driving speed be generated. If this sequence is not followed, no control variable is generated. Depending on the machine type, the setpoint can be specified using a joystick or an accelerator pedal. If the machine is driven by pedal, a direction release via an FNR switch is required for forward and reverse travel.

Starting and braking behaviour

The machine's driving behaviour can be adjusted via characteristic curves and limit values for different operating modes. For example, the sensitivity of a setpoint transmitter (joystick, pedal) can be mapped linearly or reduced near the zero point and increased in the end range to enable more sensitive starting. Acceleration and braking ramps can be set statically or dynamically. Separate speed limits can be set for each operating mode.

Speed control

When speed control is activated, the control variables for the diesel engine, pump and hydraulic motor are frozen in order to maintain the speed driven at the time of activation in an open control loop. Speed control remains active until the button is pressed again or the brakes are applied.

Inchen

When operating a wheel loader in loading mode, it is necessary to drive at increased diesel engine speed even at low speeds in order to supply power to the lift frame and bucket. The diesel engine speed is determined by the accelerator pedal in relation to the driving speed. The inch pedal is then used to reduce the driving speed again, but maintain the diesel engine speed.

Creep speed

In creep mode, the top speed can be continuously limited independently of the currently selected operating mode. The driver then has the entire pedal travel available for the limited speed range. This allows the machine to be driven even more sensitively.

Limit load controller

The limit load controller protects the diesel engine from stalling by limiting the hydraulic power depending on the reduction in diesel engine speed.

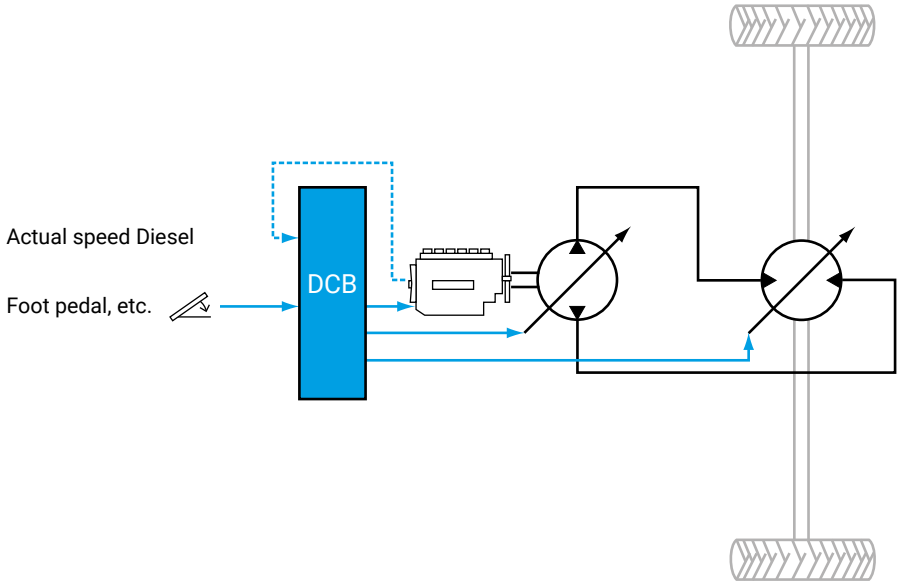

Basic drive control DCB
[Connection example]

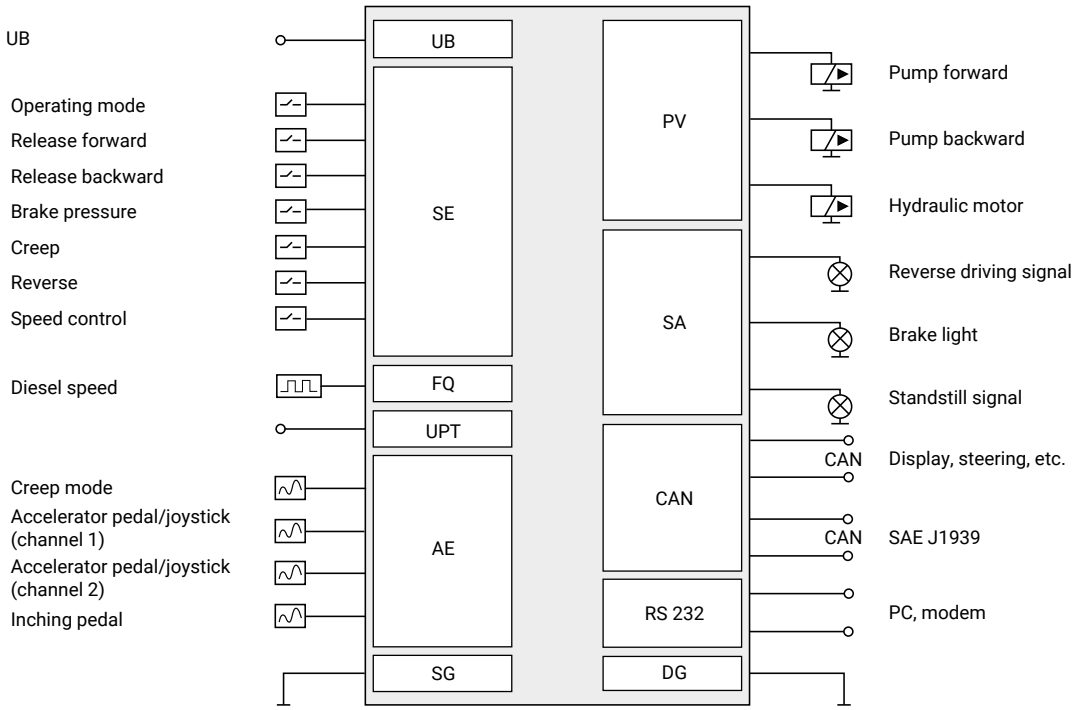

Basic drive control

HCB-DCB (Drive Control Basic)
Simple control for basic driving functions. Various modes. Driving depending on diesel engine speed, control of variable pump and motor. Load limit control.

Advanced drive control DCE
(Drive Control Eco)

The advanced drive control DCE is designed for vehicles where a higher level of comfort is expected. These include municipal machines, agricultural, forestry and construction machinery, and many more. The driver should be relieved of the task of operating the drive functions so that he can concentrate on the actual work. The DCE therefore has all the functions of the basic drive control system and also numerous controllers that can be activated as required.

The standard hardware platform for the DCE is the HCB controller. If the DCE is to be integrated into a machine control system, it can easily be ported to another Völkel hardware platform.

The comfort features in detail

Speed control

When cruise control is activated using the button, the current driving speed is stored. This serves as the setpoint for the controller, which acts on the diesel engine, the variable pump and the variable motor. This regulates the speed in a closed loop and keeps it constant within the physical limits, regardless of the terrain profile. If the accelerator pedal is pressed while cruise control is active, its value takes priority over the setpoint of the cruise control, provided that the setpoint of the accelerator pedal is higher. When the accelerator pedal is released, the setpoint for the drive returns to the stored value. Pressing the button again or applying the brake deactivates cruise control.

Constant pressure regulator

High speeds are achieved in a hydrostatic drive by reducing the displacement of the hydraulic motor. This measure results in an increase in the oil pressure required to accelerate the vehicle. When the machine is driving uphill, depending on the driving speed, the pressure may exceed a permissible value and the traction force may be lost. The constant pressure regulator increases the torque of the hydraulic motor by increasing the displacement. As a result, the pressure does not increase further, the machine slows down but the tractive force is maintained.

Brake pressure regulator

The brake pressure regulator ensures continuous deceleration throughout the entire braking process. The braking process is monitored by pressure sensors, and the adjustment times of the hydraulic pump and hydraulic motor are modified depending on the brake pressure and the displacement of the hydraulic motor. To achieve a smooth stop, the deceleration can be extended in the lower speed range. The brake pressure regulator can also help to prevent unwanted jolts and noises during deceleration.

Diesel overspeed protection

The overspeed controller protects the diesel engine from excessive speed during hydrostatic deceleration (coasting). If the diesel engine speed rises to the set speed limit range, the braking power is reduced by adjusting the hydrostat. The overspeed controller has similar properties to the brake pressure regulator: if there are no pressure sensors, this regulator can be used to generate a similar continuous deceleration. However, this then depends on the support torque of the diesel engine.

ECO mode

Modern diesel engines require operation at high utilisation at the operating point in order for exhaust gas aftertreatment to function efficiently. DCE therefore enables start-up at reduced diesel speed and operation of the machine at the load edge of the diesel engine. If the drive pump is oversized in terms of the required driving power, the drive train can be operated at the operating point with the best efficiency – the machine also reaches its final speed with reduced diesel engine speed. Maximum power is only called up when the environmental conditions require it.

E1 type approval

In order to be approved for use on European roads, the hardware platform of the DCE control system has E1 type approval.

Advanced inputs and outputs

Advanced inputs and outputs can be read in via the CAN interface.

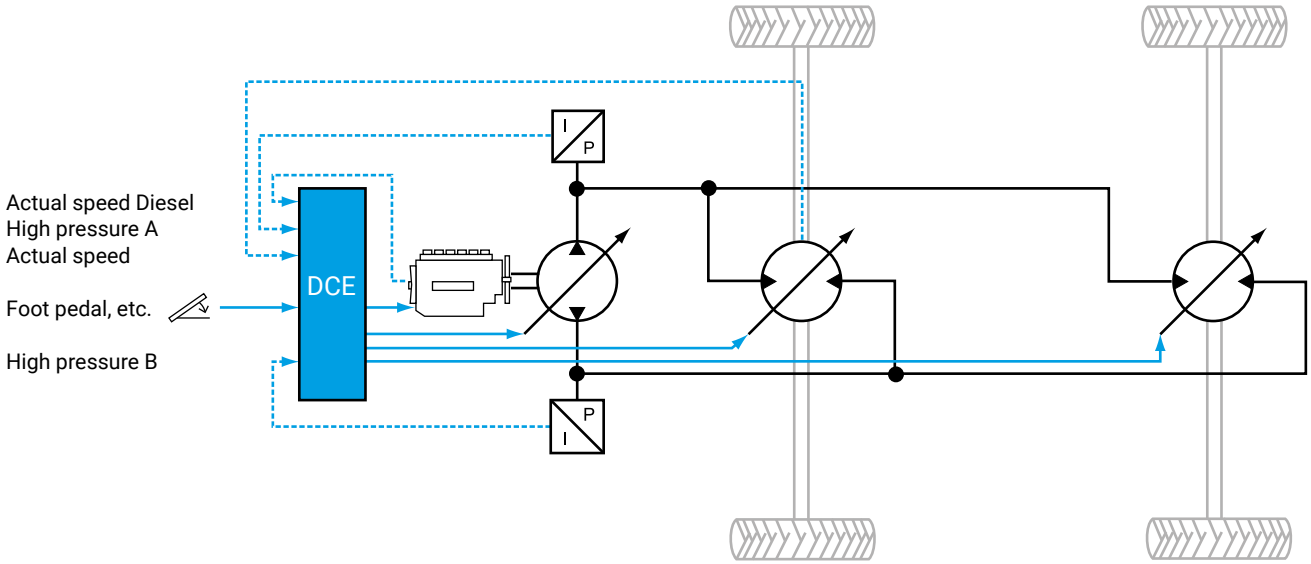

Advanced drive control DCE

[Connection example]

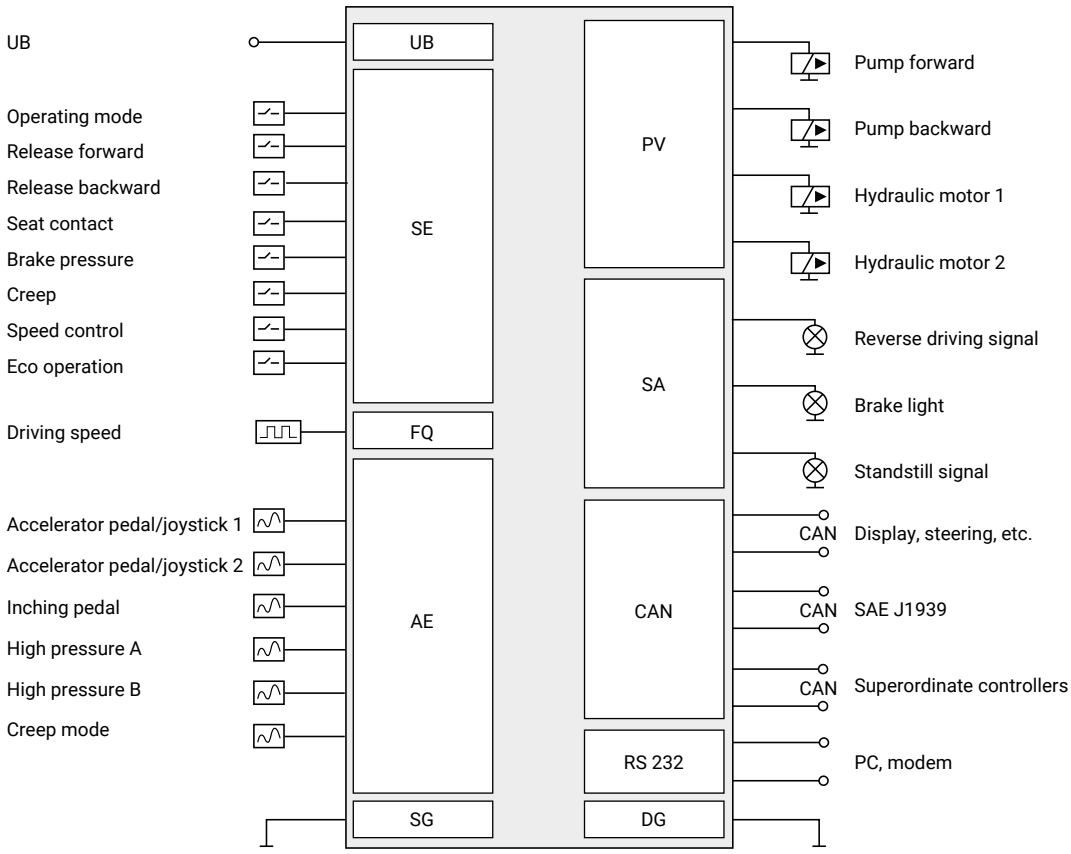

Advanced drive control

HCB-DCE (Drive Control Eco)

Control for basic driving functions. Various modes. Driving depending on diesel engine speed, control of variable displacement pump and motor. Limit load control. Speed, brake pressure and constant pressure regulators. Overspeed regulator, eco operating modes.

Drive control with traction control DCT
(Drive Control Traction)

The DCT traction control system is designed for vehicles that need to be moved with as little slip as possible. While the DCT enables agricultural and forestry machines to be driven in a way that protects the ground, it ensures more stable driving in fast-moving municipal machines. For rail vehicles, driving with slip and skid protection is even prescribed by the Federal Railway Authority. The DCT drive control system has been consistently developed to minimise hydraulic components such as flow dividers, pressure regulators, spray nozzles, etc. in order to simplify the design of the machine. The DCT drive control system therefore has all the functions of the ECO drive control system. All controllers can be activated or deactivated via parameterisation and adapted to the requirements of the current vehicle.

The standard hardware platform for the DCT is the HCE controller. If the DCT is to be integrated into a machine control system, it can easily be ported to another Völkel hardware platform.

The advanced features in detail

Traction controller

The traction controller reduces the torque on the spinning or locking wheel. This is possible on up to 3 of 4 wheels. Axle-based control is also possible if axle motors are used instead of wheel motors. The output torque can be controlled down to zero, taking into account the limits of the hydraulic motors. Depending on the change in motor displacement, the pump delivery volume is compensated to prevent unintended speed changes. The controller has an integrated learning function for easy adaptation to different vehicles.

Controlled torque range selection

If closed-loop traction control is not required, DCT supports a controlled variant: the maximum torque available at the hydraulic motor is specified by the driver or the higher-level control system via an analogue setpoint or a digitally selected fixed value. The drive control then acts as a torque limiter, which also enables ground-friendly driving. Unlike the closed-loop traction controller, this operating mode does not continuously drive at the maximum possible torque.

Acceleration mode

Acceleration mode is a special function for rail vehicles. When activated, the target value of the drive lever is not a measure of the target speed, but of the acceleration of the vehicle. If the drive lever remains in the middle position, the vehicle maintains its current speed. In parallel with acceleration mode, a safety drive circuit (SIFA, dead man's switch) must always be activated.

Coupled operation of several vehicles

When several vehicles with hydrostatic drive are coupled together, hydraulic tension must be avoided so that one vehicle in the group is not dragged or pushed by the others. A driving pressure control system ensures that each hydraulic circuit makes a positive contribution to propulsion. The same applies to rail vehicles, which have one hydraulic circuit per bogie.

Extended ECO mode

The DCT drive control system offers the option of interacting with the control of the working hydraulics. This allows the diesel engine to be controlled as required and also operated at the load edge, taking the working hydraulics into account. The DCT regulates the prioritisation of the components in the different operating modes.

AdBlue and soot particle management

If the diesel engine is operated at its optimum operating point, AdBlue consumption is lower and the particulate filter becomes clogged more slowly. If external circumstances prevent the machine from being operated in this way, measures must be taken by the machine control system. Together with a Völkel display, the advanced diesel management of modern engines is supported. Depending on the AdBlue tank level and the condition of the particulate filter, the engine power is limited or regeneration is carried out, for example.

E1 type approval

In order to be approved for use on European roads, the hardware platform of the DCT control system has E1 type approval.

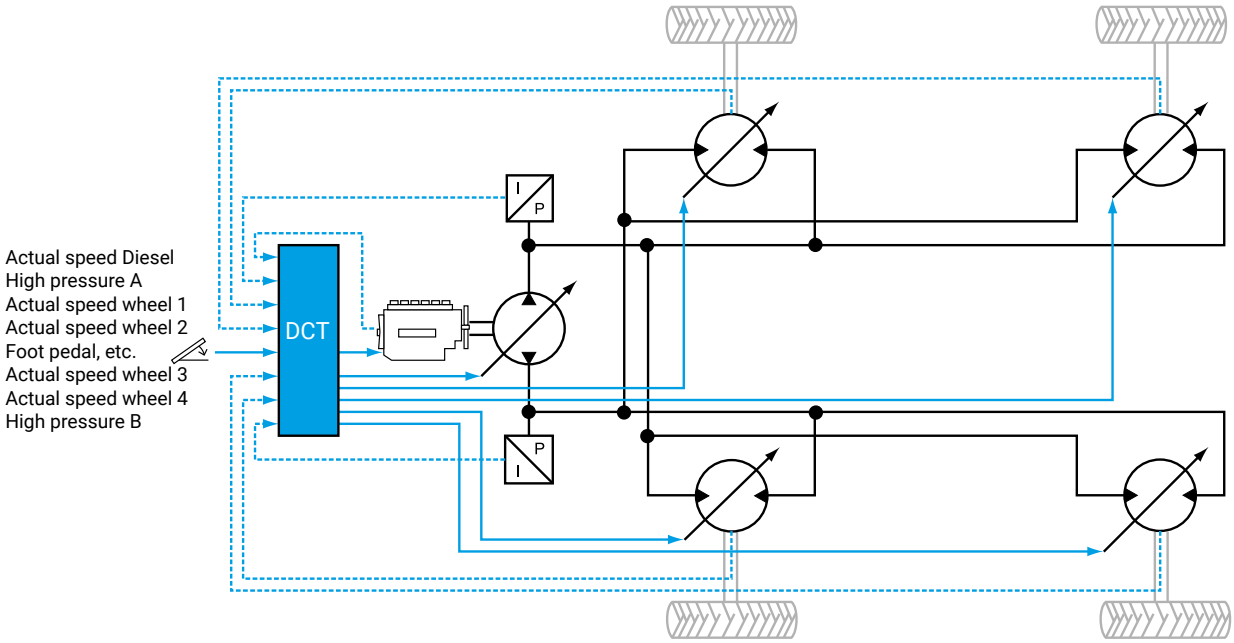

Drive control with traction control DCT
[Connection example]

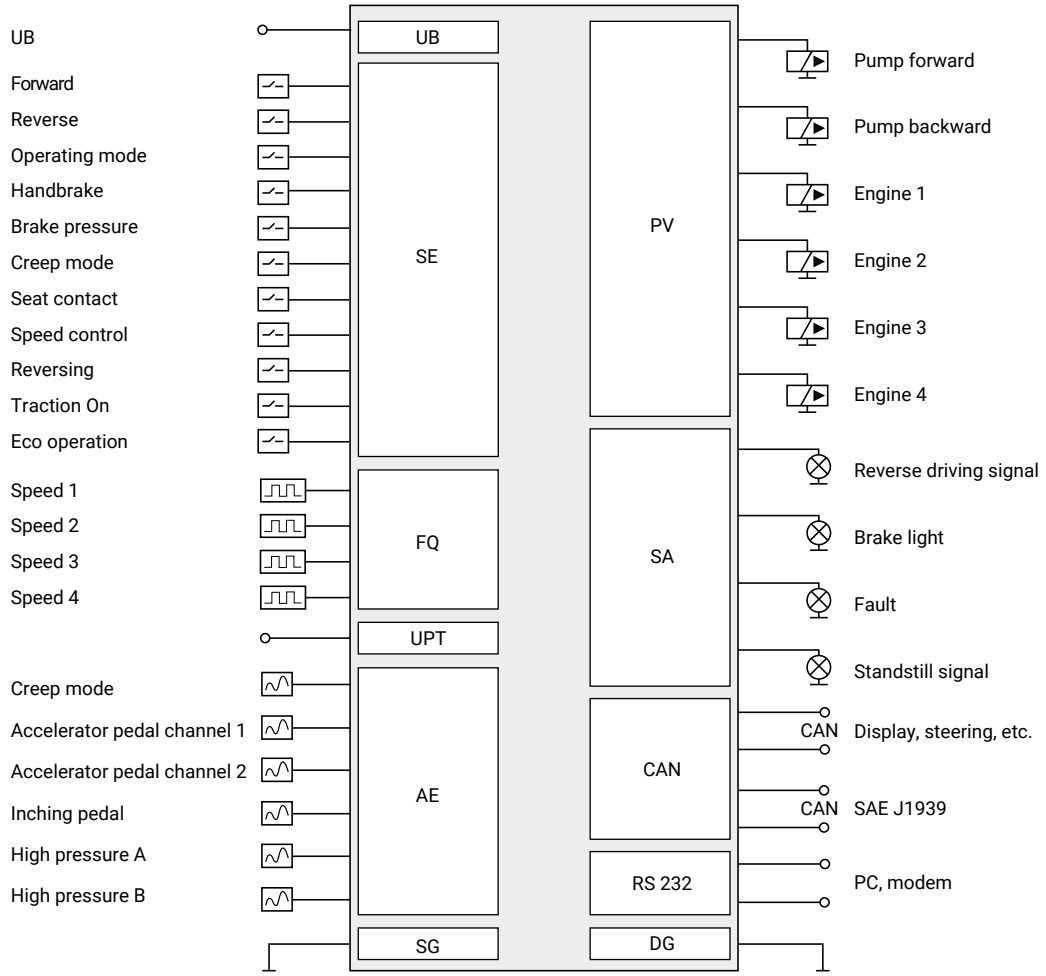

Drive control with traction control

HCE-DCT (Drive Control Traction)
Control for basic driving functions. Various modes. Driving depending on diesel engine speed, control of variable displacement pump and motor. Load limit control. Speed, brake pressure and constant pressure regulators. Overspeed regulator, eco modes. Anti-slip control for 4 wheels during acceleration and deceleration. Coupled operation of several vehicles.

Basic crawler control CCB
(Crawler Control Basic)

Like the basic HCB-DCB travel control, the basic crawler control enables more flexible, sensitive travel behaviour than purely hydraulic solutions. It supports the control of the diesel engine and travel pumps and is already equipped with extensive functions. The basic crawler control is designed as a pure 'tank steering' system, in which each track is controlled via its own joystick..

Depending on the operating mode, various characteristics such as start-up behaviour, acceleration, deceleration and limit values such as the final speed or the speed range of the diesel engine can be adjusted. The range of functions is rounded off by speed control, an adjustable creep speed, speed-dependent steering angle limitation, trim between the chains and a limit load controller to protect the diesel engine against overload.

The standard hardware platform for the CCB is the HCB controller. If the CCB is to be integrated into a machine control system, it can easily be ported to another Völkel hardware platform.

The comfort features in detail

Approval and target value specifications

A prescribed procedure must be followed to set the machine in motion: First, the diesel engine must be started, then the drive release is granted, and only then can a setpoint for the driving speed be generated. If this sequence is not followed, no control variable is generated. Depending on the machine type, the setpoint can be specified using a joystick or an accelerator pedal. If the machine is driven by pedal, a direction release via an FNR switch is required for forward and reverse travel.

Acceleration and braking behaviour

The machine's driving behaviour can be adjusted via characteristic curves and limit values for different operating modes. For example, the sensitivity of a setpoint transmitter (joystick, pedal) can be mapped linearly or reduced near the zero point and increased in the end range to enable more sensitive starting. Acceleration and braking ramps can be set statically or dynamically. Separate speed limits can be set for each operating mode.

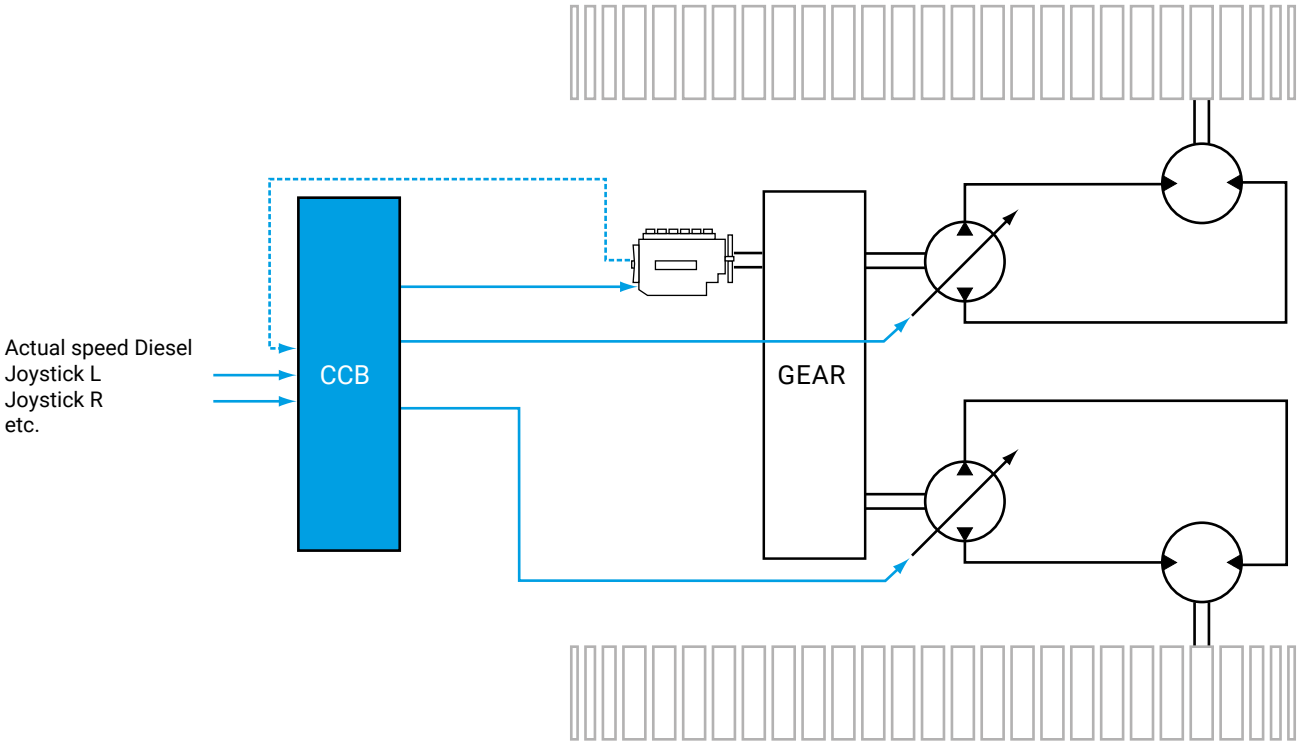

Speed control

When speed control is activated, the control variables for the diesel engine and the pump are frozen in order to maintain the speed driven at the time of activation in an open control loop. Speed control remains active until the button is pressed again or the brakes are applied.

Creep speed

In creep mode, the top speed can be continuously limited independently of the currently selected operating mode. The driver then has the entire pedal travel available for the limited speed range. This allows the machine to be driven even more sensitively.

Limit load controller

The limit load controller protects the diesel engine from stalling by limiting the hydraulic power depending on the reduction in diesel engine speed.

Basic crawler control CCB

[Connection example]

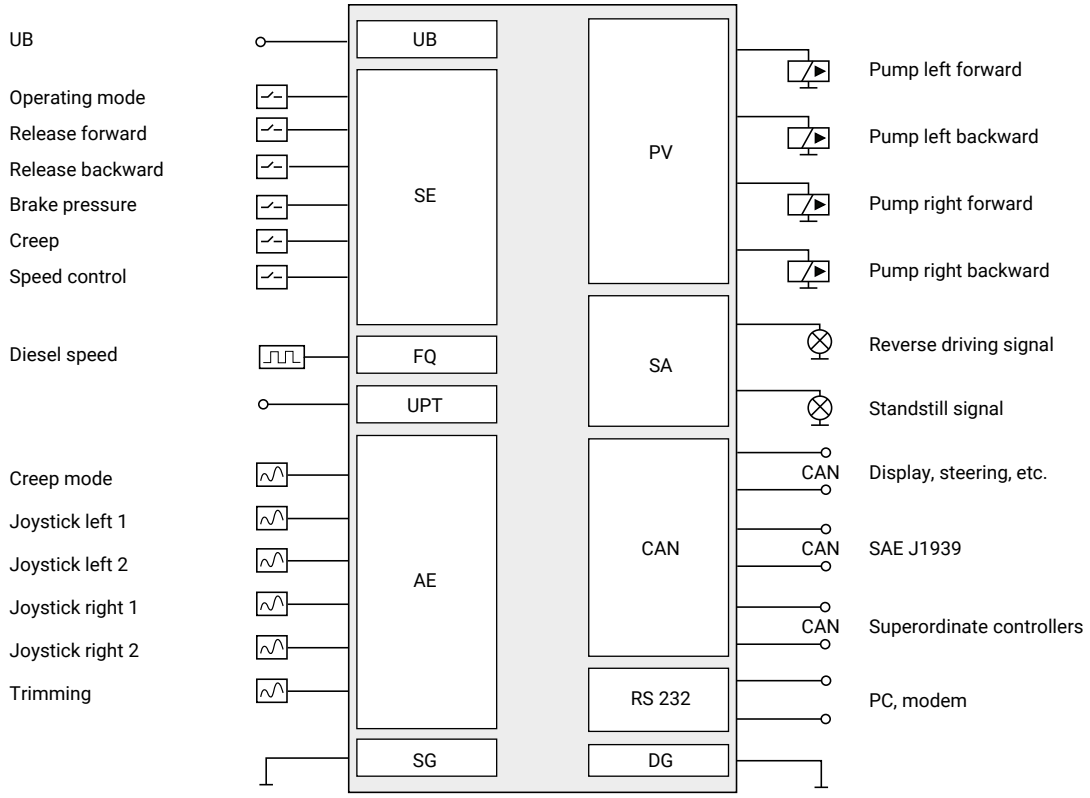

Basic crawler control

HCB-CCB (Crawler Control Basic)

Basic crawler control for basic driving functions with various modes. Driving depending on diesel engine speed, control of 2 variable displacement pumps, load limit control.

Professional crawler control CCP
(Crawler Control Professional)

The professional CCP crawler control system is designed for tracked vehicles that are expected to offer a higher level of comfort. These include snow groomers and semi-autonomous trench diggers that perform their tasks with the aid of GNSS. The driver should be relieved of the task of operating the driving functions so that he can concentrate on the actual work. The CCP has all the functions of the basic crawler control system and also numerous controllers that can be activated as required.

The standard hardware platform for the CCP is the HCE controller. If the CCP is to be integrated into a machine control system, it can easily be ported to another Völkel hardware platform.

The comfort features in detail

Operation via XY signal

The CCP can be operated like a wheel-driven vehicle: with an accelerator pedal and a steering controller or with an XY joystick. The advantage of this is that it can also process the directional specifications of a GNSS receiver. This allows the drive control to travel in a straight line or a partial circle semi-autonomously and independently of disturbances using a simple GNSS receiver.

Speed and synchronisation control

When cruise control is activated using the button, the current driving speed is stored. This serves as the setpoint for the controller, which acts on the diesel engine, the variable displacement pump and the variable displacement motor. This regulates the speed of both chains in a closed loop and keeps it constant within the physical limits, regardless of the terrain profile. The controller thus ensures that the machine runs straight ahead. If the drive lever is actuated while the speed control is active, its value takes priority over the setpoint value of the speed control, provided that the setpoint value of the sensor is greater. When the sensor is relieved, the setpoint value for the drive returns to the stored value. The controller is deactivated by pressing the button again or by actuating the brake.

Constant pressure regulator

High speeds are achieved in a hydrostatic drive by reducing the displacement of the hydraulic motor. This measure results in an increase in the oil pressure required to accelerate the vehicle. When the machine is driving uphill, depending on the driving speed, the pressure may exceed a permissible value and the traction force may be lost. The constant pressure regulator increases the torque of the hydraulic motor by increasing the displacement. As a result, the pressure does not increase further, the machine slows down but the tractive force is maintained.

brake pressure regulator

The brake pressure regulator ensures continuous deceleration throughout the entire braking process. The braking process is monitored by pressure sensors, and the adjustment times of the hydraulic pump and hydraulic motor are modified depending on the brake pressure and the displacement of the hydraulic motor. To achieve a smooth stop, the deceleration can be extended in the lower speed range. The brake pressure regulator can also help to prevent unwanted jolts and noises during deceleration.

Diesel overspeed protection

The overspeed controller protects the diesel engine from excessive speed during hydrostatic deceleration (coasting). If the diesel engine speed rises to the set speed limit range, the braking power is reduced by adjusting the hydrostat. The overspeed controller has similar properties to the brake pressure regulator: if there are no pressure sensors, this regulator can be used to generate a similar continuous deceleration. However, this then depends on the support torque of the diesel engine.

ECO mode

Modern diesel engines require operation at high utilisation at the operating point in order for exhaust gas aftertreatment to function efficiently. CCP therefore enables start-up at reduced diesel speed and operation of the machine at the load edge of the diesel engine. If the drive pump is oversized in terms of the required driving power, the drive train can be operated at the operating point with the best efficiency – the machine also reaches its final speed with reduced diesel engine speed. Maximum power is only called up when the environmental conditions require it.

Extended ECO mode

The CCP drive control system offers the option of interacting with the control system for the working hydraulics. This allows the diesel engine to be controlled as required and also operated at the load edge, taking the working hydraulics into account. The CCP regulates the prioritisation of the components in the different operating modes.

AdBlue and soot particle management

If the diesel engine is operated at its optimum operating point, AdBlue consumption is lower and the particulate filter

becomes clogged more slowly. If external circumstances prevent the machine from being operated in this way, measures must be taken by the machine control system. Together with a Völkel display, this supports the advanced diesel management of modern engines. Depending on the AdBlue tank level and the condition of the particulate filter, the engine power is limited or regeneration is carried out, for example.

E1 type approval

In order to be approved for use on European roads, the hardware platform of the CCP control system has E1 type approval.

Advanced inputs and outputs

Advanced inputs and outputs can be read in via the CAN interface.

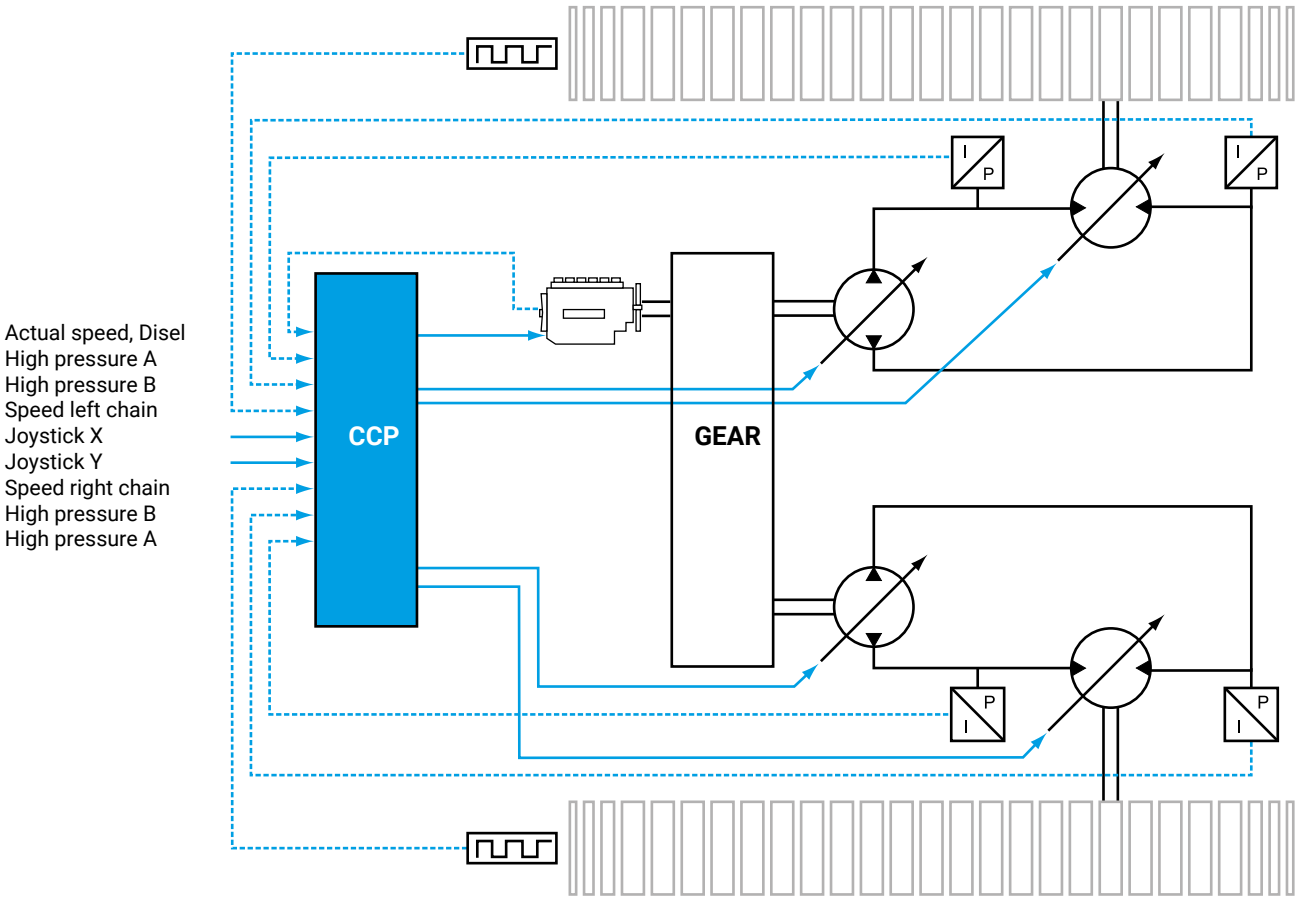

CCP Professoinal crawler control
[Connection example]

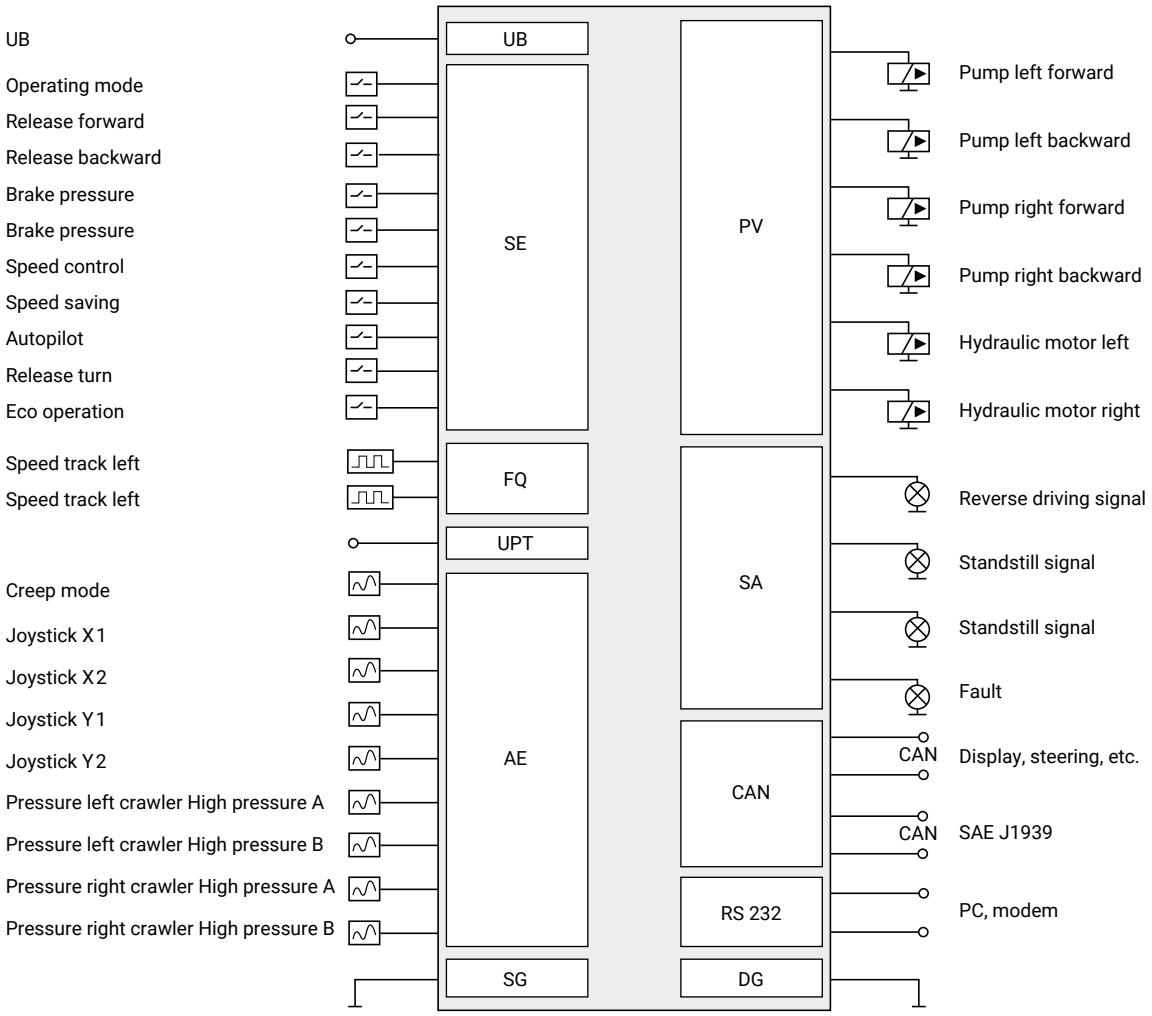

Professional crawler control

HCE-CCP (Crawler Control Professional)

Crawler control for basic driving functions with various modes. Driving depending on diesel engine speed, control of 2 variable displacement pumps, load limit control. Speed, brake pressure and constant pressure regulators, overspeed regulator, eco modes, preparation for steering via GNSS.

Overview of drive and crawler controls

	Driving controls			Crawler controls	
	HCB-DCB [Basic]	**HCB-DCE** [Eco]	**HCE-DCT** [Traction]	**HCB-CCB** [Basic]	**HCE-CCP** [Professional]
E1 type approval		✓	✓		✓
Cruise control controlled	✓	✓	✓		✓
Cruise control regulated		✓	✓		✓
Dynamic brake signal evaluation (analogue brake signal)		✓	✓		
Digital brake signal evaluation	✓	✓	✓	✓	✓
Acceleration mode			✓		
Pedal control	✓	✓	✓		✓
1-joystick control	✓	✓	✓		✓
2-joystick control				✓	✓
IO extension via CAN busDiesel engine		✓	✓		✓
Diesel engine management via SAE-J1939	✓	✓	✓	✓	✓
AdBlue / Soot Particle Management			✓		✓
Diesel speed adjustment via potentiometer	✓	✓	✓	✓	✓
Preparation for display expansion		✓	✓		✓
Send diagnostic data via CAN bus		✓	✓		✓
Connection to higher-level master control system (via CAN bus)	✓	✓	✓	✓	✓
Eco mode		✓	✓		✓
Starting with reduced diesel engine speed		✓	✓		✓
Maximum speed with reduced diesel engine speed		✓	✓		✓
Driving at the load edge		✓	✓		✓
Interaction with the working hydraulics for operation at optimum diesel engine speed			✓		✓
Configurable characteristic maps (number of parameter sets with freely selectable names)	2	4	8	2	4
Driving with fixed or variable diesel engine speed	✓	✓	✓	✓	✓
Freely selectable driving setpoint source	✓	✓	✓	✓	✓
Freely selectable driving direction source	✓	✓	✓	✓	✓
Linear or hyperbolic driving curves	✓	✓	✓	✓	✓
Speed range of the diesel engine	✓	✓	✓	✓	✓
Dynamic acceleration	✓	✓	✓	✓	✓
Diesel overspeed protection		✓	✓		✓
Brake pressure regulator		✓	✓		✓
Reverse mode (quick response)	✓	✓	✓		
Kickdown	✓	✓	✓		
Redundant setpoint specifications	✓	✓	✓	✓	✓
Simple and intuitive configuration via PC	✓	✓	✓	✓	✓
Diagnosis and visualisation of signal curves via PC	✓	✓	✓	✓	✓
Integrated current measurements	✓	✓	✓	✓	✓
Modem support (ConDoc®)	✓	✓	✓	✓	✓
Modem support (optional, user data transmission)		✓	✓		✓
Recording of limit values (temperature, pressure, etc.)		✓	✓		✓
Fault memory	✓	✓	✓	✓	✓
Controlled torque range selection			✓		✓
Creep speed	✓	✓	✓	✓	✓
Inch mode	✓	✓	✓		
General release (2 independent signals)	✓	✓	✓	✓	✓
Seat contact evaluation		✓	✓		✓
Traction controller			✓		
Limit load controller	✓	✓	✓	✓	✓
Pump capacity limiter		✓	✓		✓
Constant pressure regulator (for driving on slopes)		✓	✓		✓
Speed limiter		✓	✓		✓
Emergency operation (in case of sensor failure)		✓	✓		✓
Protective functions (plausibility checks of sensor signals)		✓	✓		✓
Plausibility checks of sensor signals		✓	✓		✓
Start-up block in the event of a setpoint error at the switch-on time	✓	✓	✓	✓	✓
Start-up lock after braking to a standstill	✓	✓	✓	✓	✓
Speed measurement		✓	✓		✓
High pressure A/B evaluation		✓	✓		✓
Number of controllable pumps	1	1	2	2	2
Number of controllable motors	1	2	4	0	2
Reading in the diesel engine speed via frequency input	✓	✓	✓	✓	✓
Signal outputs (SA)	0,2 A	✓	✓	✓	✓
Reversing	0,2 A	✓	✓	✓	✓
Brake light	0,2 A	✓	✓	✓	✓
Standstill signal	0,2 A	✓	✓	✓	✓
Signal error	0,2 A	✓	✓	✓	✓
Multiple unit operation with several vehicles			✓		
Steering angle limitation, speed-dependent				✓	✓
Offset shift between the two drive chains				✓	✓
Speed evaluation of the drive chains					✓
Speed controller					✓
Push-button switch					✓
Spinning on the spot					✓

Steering control SCB
(Steering Control Basic)

The steering control provides a universal steering system for an axle with two wheels. Several controllers can communicate with each other via CAN bus, so that up to 4 axles can be steered. The steering set value can be set via incremental rotary encoders (electronic steering wheel), absolute rotary encoders (set value from front axle or drawbar), via joystick or via digital inputs.

Possible extended functions

- Steering with the Ackermann algorithm, in which all wheels are positioned tangential to a circle center point to reduce the turning circle
- Tramline functions, in which all wheels, including those of the hitched equipment drive in the same track and thereby protect vegetation
- Crab steering, in which all wheels are adjusted to be parallel to move the vehicle sideways
- Speed-dependent limitation of the steering angle
- Switchable steering: only front axle only or only rear axle

Inputs and outputs

- Digital inputs, parameterizable as enabled, Ackermann algorithm, crab steering, follow track, straight-ahead, reversal of driving direction
- Frequency input for drive speed (alternatively via CAN bus) Frequency inputs are evaluated as rotary encoders input for a steering wheel (with encoder output)
- Analog inputs for target steering angle, actual steering angle
- Proportional outputs with current feedback measurement for control of the steering cylinders
- Status outputs, can alternatively be used to display fault, end stop left or right, straight ahead position

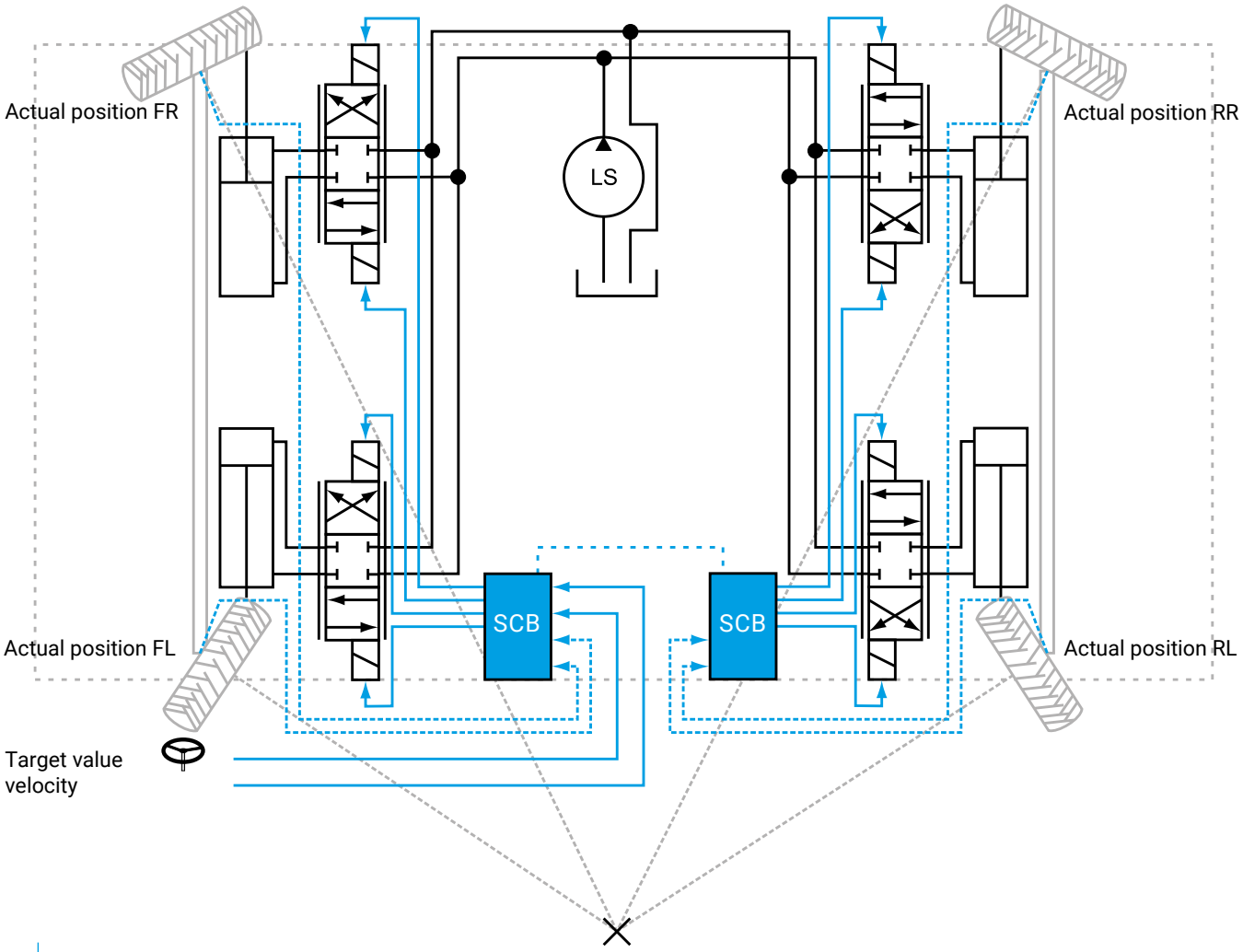

Steering control SCB
[connection example]

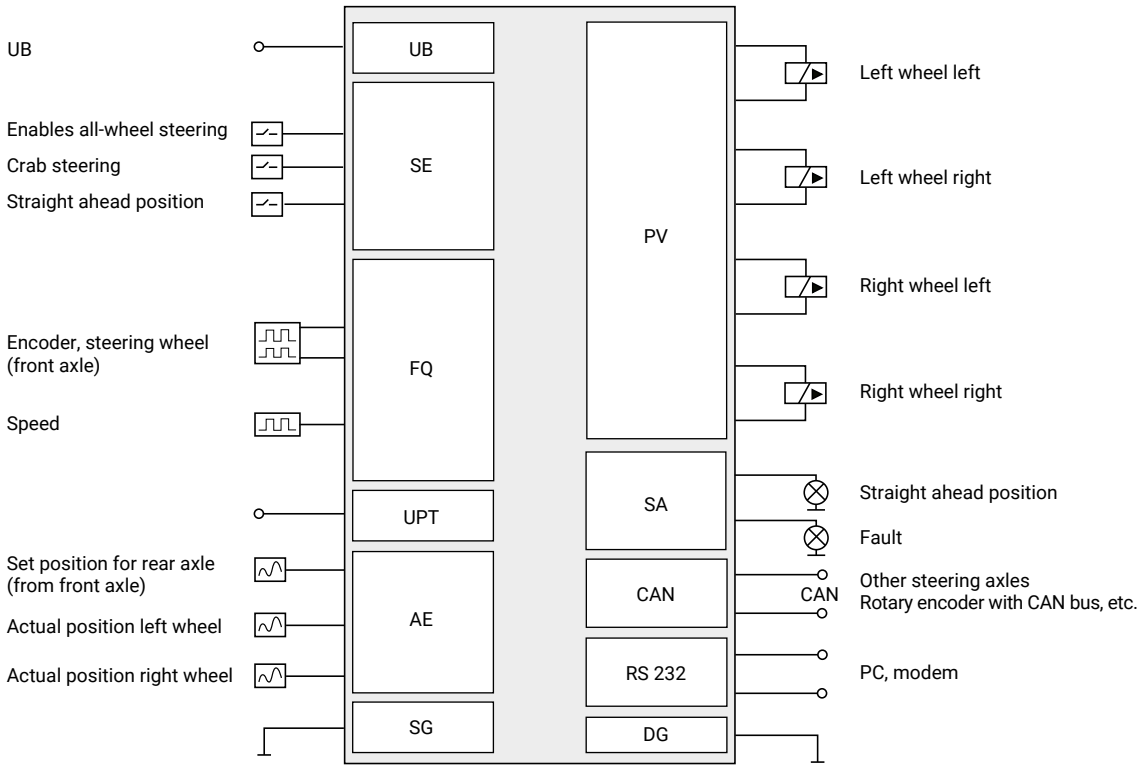

Steering control

HCB-SCB (Steering Control Basic)
Steering control for all-wheel drive, auxiliary and trailing steering

Control units HCB and HCE

HCB and HCE are universal control units for mobile hydraulic applications. They each have two microcontrollers with mutual monitoring and a safety cut-out for the outputs.

A serial flash memory (2MB) enables extensive recording of machine data.

HCB and HCE controllers can be interconnected via the CAN fieldbus to form a larger system.

The CAN bus also enables communication with other electronic components.

Explanatory notes

Supply, service

UB	Power supply, battery
DG	Mass
UPT	Sensor supply (output)
UMT	Supply handheld terminal, GSM modem (output)
SG	Signal ground
RxD	Serial interface, receiving line
TxD	Serial interface, transmission line
CH	CAN-Bus (High)
CL	CAN-Bus (Low)

Entrances

SE	Switch input, digital input
FQ	Frequency input
AE	Analogue input (voltage)
CE	Analogue input (current)

Outputs

PV	Proportional output (with current feedback)
	PV1P proportional output 1 Plus
	PV1M proportional output 1 Minus
SA	Switching output, digital output
PWM	Pulse width modulated output
DA	Analogue output voltage

HCB and HCE structure diagram

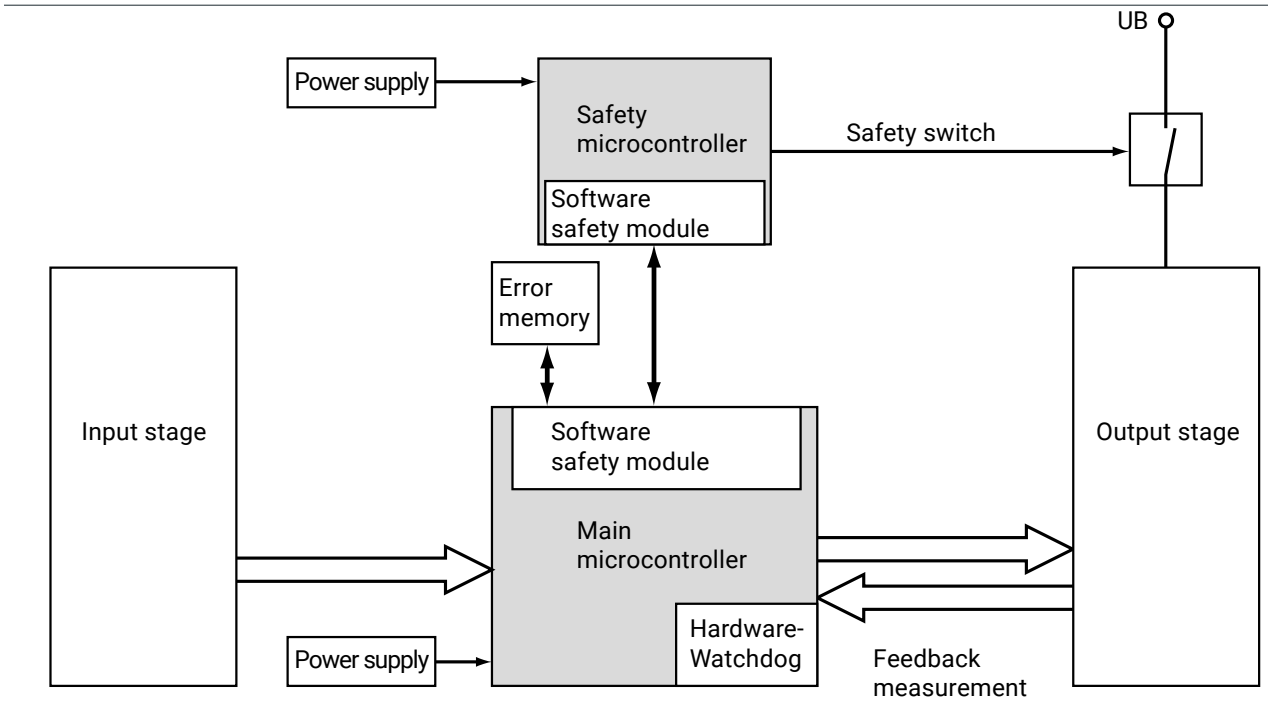

HCB connection diagram

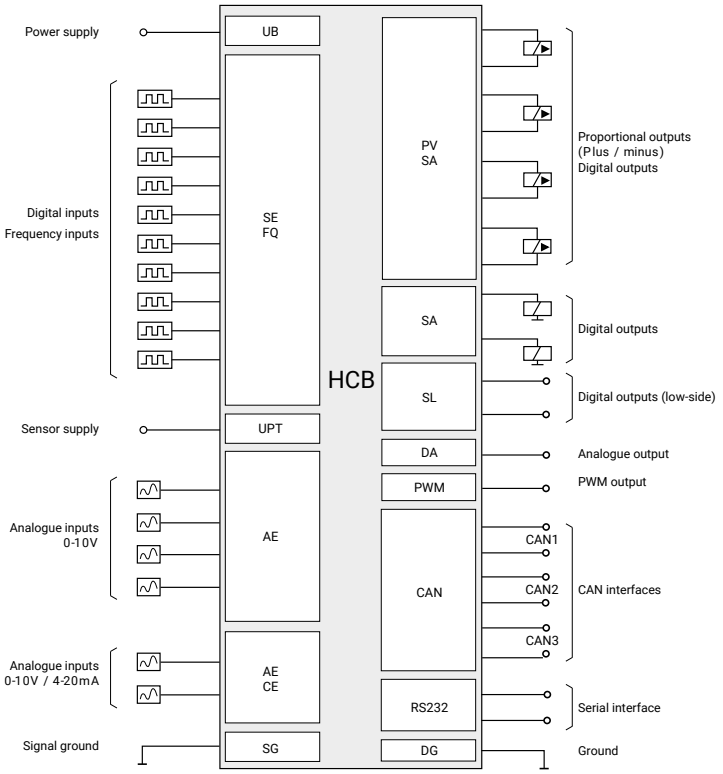

HCE connection diagram

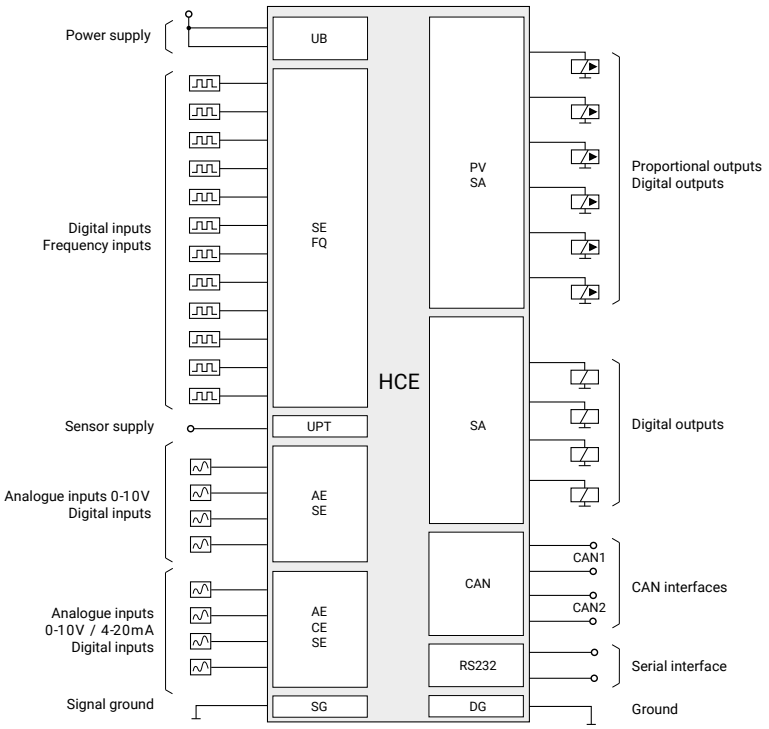

For more detailed information, please visit:
www.voelkel
or request our data sheets.

PC-software ConDoc®

The PC software ConDoc® - Control&Document® is a powerful diagnostic and service program that can be used universally for all Völkel controllers. It supports parameterization, is used for analysis and documentation of the control behavior and functions both stationary and via modem (remote diagnosis). The use of ConDoc® reduces service costs and downtimes in the event of malfunctions.

ConDoc® Functions

Parameterization of a controller before and during operation

The user navigates and changes parameters using mouse or keyboard. With “online” settings, the effects can be observed immediately. This enables a targeted and fast procedure.

Saving and loading the Controller configuration in files

With a simple data backup the exactly defined values are available for documentation and reproduction. Restoring the stored file to the same or another identical controller ensures data consistency and short commissioning times.

Display of operating variables of a controller

The data is stored as a numerical value and - in the temporal sequence - shown as a diagram in real time [10 ms grid]. The diagrams - with up to 50 variables per plot - can be saved, reloaded and printed.

Remote diagnosis

The direct connection from the controller to the PC is replaced by a telephone connection and modems. GSM modems can also be used for the adjustment of mobile machines.

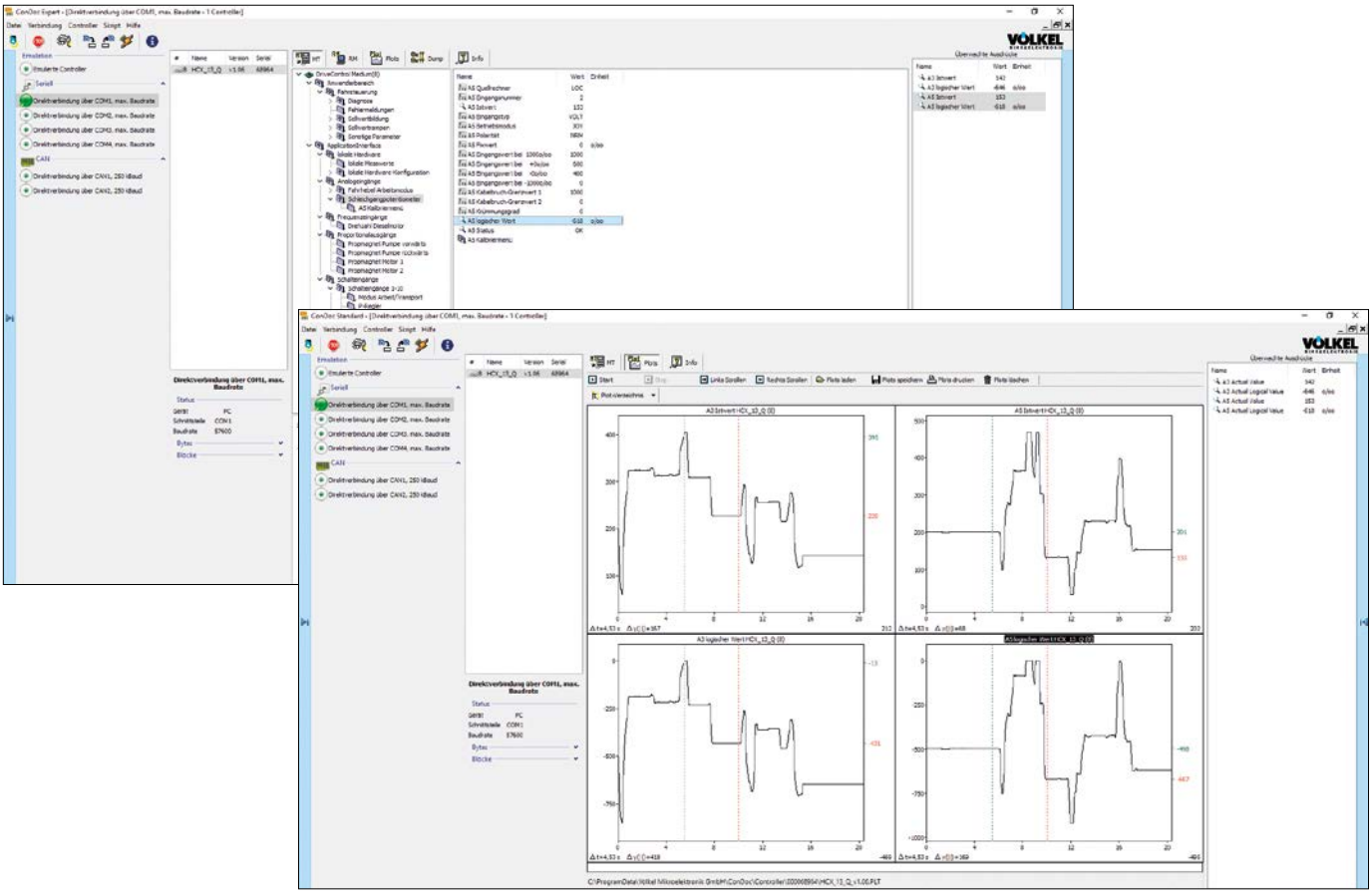

VÖLKEL
MIKROELEKTRONIK

SIMPLY
INSTALL
SUCCESS

If your specific product is not listed here

take advantage of our competence in customized electronics. We can develop the optimal solution for your machine in a short time which is built for the future.

For more information about other products and our company, visit **www.voelkel.de.**

Discuss your project with us
Phone. +49 2534 9731-0

VÖLKEL
MIKROELEKTRONIK

VÖLKEL Mikroelektronik GmbH
Otto-Hahn-Straße 30
48161 Münster
Germany

+49 2534 9731-0
info@voelkel.de

www.voelkel.de